Wood Ultimate Casement and Push Out Casement Bow and Bay

Unit Features 1
Min and Max Sizing, Projection and Standard Heights for Bows and Bays 2
Standard Heights for Bows and Bays 3
Measurement Conversions: WUCABB and WUPCABB 4
Bow Rough Opening and Projection - 3 Wide, 4 Wide, 5 Wide, 6 Wide 5
Section Details: Bow 6
Standard Width Call Number: WUCABB and WUPCABB-30° Bay 7
Construction Details / Rough Opening and Projection Calculations: 30° Bay 8
Standard Width Call Number: WUCABB and WUPCABB-45° Bay 9
Construction Details / Rough Opening and Projection Calculations: 45° Bay 10
Construction Details / Rough Opening and Projection Calculations: 60° Bay 11
Construction Details / Rough Opening and Projection Calculations: 90° Bay 12

Unit Features

Wood Ultimate Casement / Awning Bow and Bay - WUCABB

Wood Ultimate Push Out Casement / Awning Bow and Bay - WUPCABB

- 6 degree angle on Bows
- Laminated Pine wood or optional Douglas Fir head and seat boards installed
- Installation brackets are available in lieu of nailing fin
- Optional retro fit bay square jamb return for WUCABB and WUPCABB

Information concerning Daylight Opening, Egress Opening, and Vent Opening will be determined based on the individual components of the Bow or Bay.

Bay standard operation as viewed from exterior.

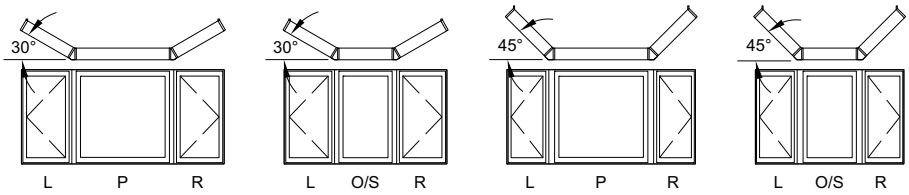

Bow standard operation as viewed from exterior.

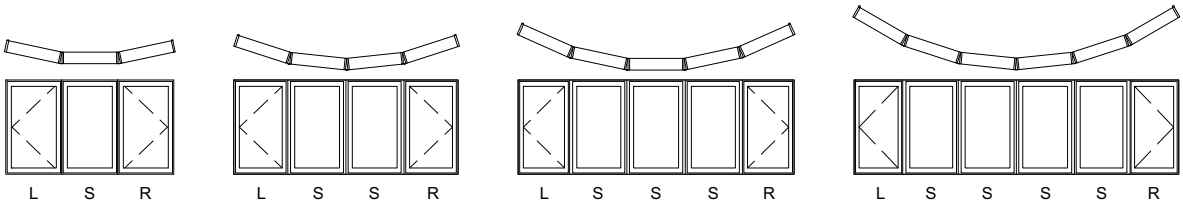

NOTE: Also see Wood Ultimate Casement Collection for more unit features.

NOTE: Use of wood flat casing will change the Rough Opening and Projection. Contact your Marvin representative for further information.

Min and Max Sizing, Projection and Standard Heights for Bows and Bays

Configuration	Minimum and Maximum Rough Opening Guidelines									
	Width			Height		Width			Height	
	in	mm	×	in	mm	in	mm	×	in	mm
Bow - 3 Wide	50 1/16	(1272)	×	26	(660)	109 3/16	(2773)	×	74	(1880)
Bow - 4 Wide	65 3/4	(1670)	×	26	(660)	143 19/32	(3647)	×	74	(1880)
Bow - 5 Wide	80 11/16	(2049)	×	26	(660)	157 7/32	(3993)	×	74	(1880)
Bow - 6 Wide	94 5/8	(2403)	×	26	(660)	162 1/8	(4118)	×	74	(1880)
Special Angle Bow	48	(1219)	×	26	(660)	162 1/8	(4118)	×	74	(1880)
Bay - 30°	48 13/32	(1230)	×	26	(660)	139	(3531)	×	74	(1880)
Bay - 45°	43 7/8	(1114)	×	26	(660)	128 5/32	(3255)	×	74	(1880)
Bay - 60°	36 1/4	(921)	×	26	(660)	112 1/4	(2851)	×	74	(1880)
Bay - 90°	17 5/8	(448)	×	26	(660)	73 5/8	(1870)	×	74	(1880)

Call Number Height	Rough Opening Height (w/ head & seat boards)		Frame Size Height (w/ head & seat boards)	
	ft-in	mm	ft-in	mm
24	2-1 1/4	(641)	2-0 3/4	(629)
26	2-3 1/4	(692)	2-2 3/4	(679)
28	2-5 1/4	(743)	2-4 3/4	(730)
32	2-9 1/4	(845)	2-8 3/4	(832)
36	3-1 1/4	(946)	3-0 3/4	(933)
40	3-5 1/4	(1048)	3-4 3/4	(1035)
44	3-9 1/4	(1149)	3-8 3/4	(1137)
48	4-1 1/4	(1251)	4-0 3/4	(1238)
54	4-7 1/4	(1403)	4-6 3/4	(1391)
56	4-9 1/4	(1454)	4-8 3/4	(1441)
60	5-1 1/4	(1556)	5-0 3/4	(1543)
64	5-5 1/4	(1657)	5-4 3/4	(1645)
72	6-1 1/4	(1861)	6-0 3/4	(1848)

Standard Heights for Bows and Bays

Call Number Height	Rough Opening Height (w/ head & seat boards)		Frame Size Height (w/ head & seat boards)	
	ft-in	mm	ft-in	mm
24	2-1 1/4	(641)	2-0 3/4	(629)
26	2-3 1/4	(692)	2-2 3/4	(679)
28	2-5 1/4	(743)	2-4 3/4	(730)
32	2-9 1/4	(845)	2-8 3/4	(832)
36	3-1 1/4	(946)	3-0 3/4	(933)
40	3-5 1/4	(1048)	3-4 3/4	(1035)
44	3-9 1/4	(1149)	3-8 3/4	(1137)
48	4-1 1/4	(1251)	4-0 3/4	(1238)
54	4-7 1/4	(1403)	4-6 3/4	(1391)
56	4-9 1/4	(1454)	4-8 3/4	(1441)
60	5-1 1/4	(1556)	5-0 3/4	(1543)
64	5-5 1/4	(1657)	5-4 3/4	(1645)
72	6-1 1/4	(1861)	6-0 3/4	(1848)

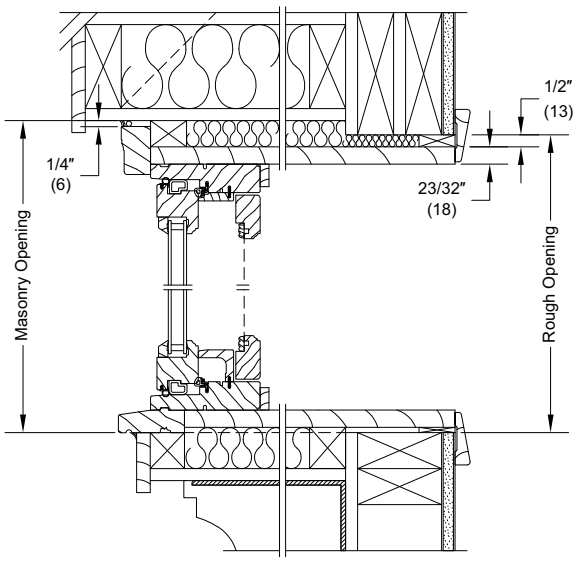

Measurement Conversions: WUCABB and WUPCABB

Unit Measurements		Width		Height	
From	To				
Rough Opening - 30° Bay		**in**	**mm**	**in**	**mm**
Masonry Opening	Rough Opening (w/ head and seat boards)	-4 5/16	(110)	+ 1/2	(13)
Rough Opening - 45° Bay		**in**	**mm**	**in**	**mm**
Masonry Opening	Rough Opening (w/ head and seat boards)	-4 5/8	(117)	+ 1/2	(13)
Rough Opening - 90° Bay		**in**	**mm**	**in**	**mm**
Masonry Opening	Rough Opening (w/ head and seat boards)	-10 7/16	(265)	+ 1/2	(13)
Rough Opening - 3W Bow		**in**	**mm**	**in**	**mm**
Masonry Opening	Rough Opening (w/ head and seat boards)	-3 3/16	(81)	+ 1/2	(13)
Rough Opening - 4W Bow		**in**	**mm**	**in**	**mm**
Masonry Opening	Rough Opening (w/ head and seat boards)	-3 9/16	(90)	+ 1/2	(13)
Rough Opening - 5W Bow		**in**	**mm**	**in**	**mm**
Masonry Opening	Rough Opening (w/ head and seat boards)	-3 15/16	(100)	+ 1/2	(13)
Rough Opening - 6W Bow		**in**	**mm**	**in**	**mm**
Masonry Opening	Rough Opening (w/ head and seat boards)	-4 5/16	(110)	+ 1/2	(13)

NOTE: if no head board, Deduct 11/16" (17) from Rough Opening Height

NOTE: If no seat board, Deduct 11/16" (17) from Rough Opening Height

NOTE: Wood Flat Casing will change Rough Opening and Projection. Contact your Marvin representative.

Bow Rough Opening and Projection - 3 Wide, 4 Wide, 5 Wide, 6 Wide

Call Number (Width)	Number Wide	Bow			
		RO		Projection	
16	3	4-2 1/16	(1272)	0-3 3/4	(95)
16	4	5-5 3/4	(1670)	0-7 11/32	(187)
16	5	6-8 11/16	(2049)	0-10 7/8	(276)
16	6	7-10 5/8	(2403)	1-4 1/32	(407)
18	3	4-7 31/32	(1422)	0-4 3/16	(106)
18	4	6-1 9/16	(1868)	0-8 3/16	(208)
18	5	7-6 1/4	(2292)	1-0 3/32	(307)
18	6	8-9 7/8	(2689)	1-5 27/32	(454)
20	3	5-1 7/8	(1572)	0-4 9/16	(116)
20	4	6-9 5/16	(2065)	0-9	(229)
20	5	8-3 13/16	(2535)	1-1 5/16	(338)
20	6	9-9 1/8	(2975)	1-7 11/16	(500)
24	3	6-0 11/16	(1846)	0-5 7/16	(138)
24	4	8-0 7/8	(2461)	0-10 21/32	(271)
24	5	9-10 15/16	(3021)	1-3 25/32	(401)
24	6	11-7 5/8	(3546)	1-11 11/32	(593)
26	3	6-7 5/8	(2022)	0-5 27/32	(148)
26	4	8-8 11/16	(2659)	0-11 1/2	(292)
26	5	10-8 1/2	(3264)	1-5 1/32	(432)
26	6	12-6 7/8	(3832)	2-1 3/16	(639)
28	3	7-1 17/32	(2172)	0-6 1/4	(159)
28	4	9-4 7/16	(2856)	1-3 5/16	(389)
28	5	11-6 1/16	(3507)	1-6 1/4	(464)
28	6	13-6 1/8	(4118)	2-3	(686)
30	3	7-7 15/32	(2323)	0-6 21/32	(169)
30	4	10-0 1/4	(3054)	1-1 5/32	(334)
30	5	12-3 5/8	(3750)	1-7 15/32	(495)
32	3	8-1 3/8	(2473)	0-7 1/16	(179)
32	4	10-8	(3251)	1-1 31/32	(355)
32	5	13-1 3/16	(3993)	1-8 11/16	(525)
36	3	9-1 3/16	(2773)	0-7 29/32	(201)
36	4	11-11 19/32	(3647)	1-3 5/8	(397)

NOTE: Wood Flat Casing will change Rough Opening and Projection. Contact your Marvin representative.

Section Details: Bow

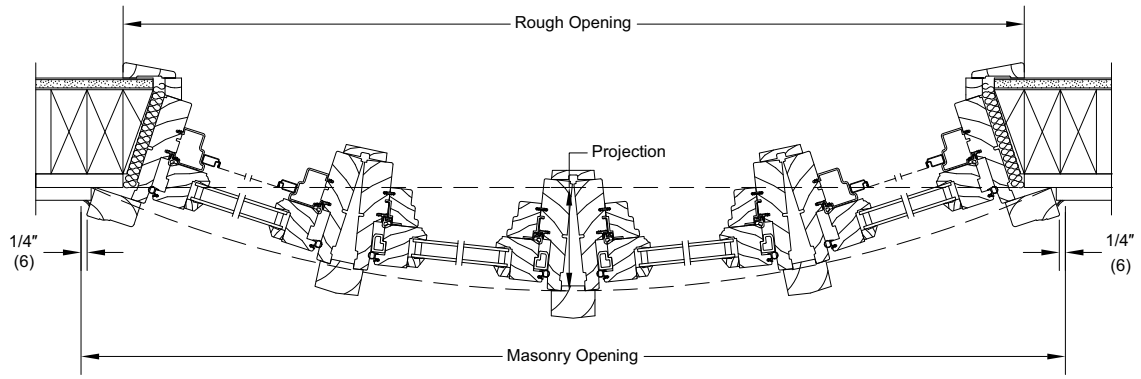

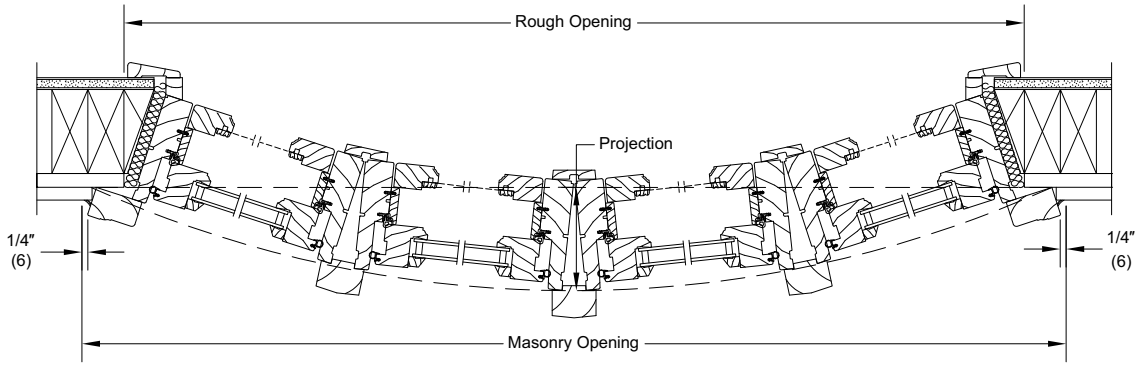

NOTE: Use of wood flat casing will change Rough Opening and Projection. Contact your Marvin representative for further information.

Standard Width Call Number: WUCABB and WUPCABB-30° Bay

Call Number (Width)			30° Bay			
Side	Center	Side	RO		Projection	
16	16	16	4-0 3/8	(1229)	0-9 13/32	(239)
16	18	16	4-2 3/8	(1279)	0-9 13/32	(239)
16	20	16	4-4 3/8	(1330)	0-9 13/32	(239)
16	24	16	4-8 3/8	(1432)	0-9 13/32	(239)
16	26	16	4-10 3/8	(1483)	0-9 13/32	(239)
16	28	16	5-0 3/8	(1533)	0-9 13/32	(239)
16	30	16	5-2 3/8	(1584)	0-9 13/32	(239)
16	32	16	5-4 3/8	(1635)	0-9 13/32	(239)
16	36	16	5-8 3/8	(1737)	0-9 13/32	(239)
16	40	16	6-0 3/8	(1838)	0-9 13/32	(239)
16	48	16	6-8 3/8	(2041)	0-9 13/32	(239)
16	56	16	7-4 3/8	(2245)	0-9 13/32	(239)
16	60	16	7-8 3/8	(2346)	0-9 13/32	(239)
16	64	16	8-0 3/8	(2448)	0-9 13/32	(239)
16	72	16	8-8 3/8	(2651)	0-9 13/32	(239)
18	18	18	4-5 27/32	(1367)	0-10 13/32	(264)
18	20	18	4-7 27/32	(1418)	0-10 13/32	(264)
18	24	18	4-11 27/32	(1520)	0-10 13/32	(264)
18	26	18	5-1 27/32	(1571)	0-10 13/32	(264)
18	28	18	5-3 27/32	(1621)	0-10 13/32	(264)
18	30	18	5-5 27/32	(1672)	0-10 13/32	(264)
18	32	18	5-7 27/32	(1723)	0-10 13/32	(264)
18	36	18	5-11 27/32	(1825)	0-10 13/32	(264)
18	40	18	6-3 27/32	(1926)	0-10 13/32	(264)
18	48	18	6-11 27/32	(2129)	0-10 13/32	(264)
18	56	18	7-7 27/32	(2333)	0-10 13/32	(264)
18	60	18	7-11 27/32	(2434)	0-10 13/32	(264)
18	64	18	8-3 27/32	(2536)	0-10 13/32	(264)
18	72	18	8-11 27/32	(2739)	0-10 13/32	(264)
20	20	20	4-11 5/16	(1506)	0-11 13/32	(289)
20	24	20	5-3 5/16	(1608)	0-11 13/32	(289)
20	26	20	5-5 5/16	(1659)	0-11 13/32	(289)
20	28	20	5-7 5/16	(1709)	0-11 13/32	(289)
20	30	20	5-9 5/16	(1760)	0-11 13/32	(289)
20	32	20	5-11 5/16	(1811)	0-11 13/32	(289)
20	36	20	6-3 5/16	(1913)	0-11 13/32	(289)
20	40	20	6-7 5/16	(2014)	0-11 13/32	(289)
20	48	20	7-3 5/16	(2217)	0-11 13/32	(289)
20	56	20	7-11 5/16	(2421)	0-11 13/32	(289)
20	60	20	8-3 5/16	(2522)	0-11 13/32	(289)
20	64	20	8-7 5/16	(2624)	0-11 13/32	(289)
20	72	20	9-3 5/16	(2827)	0-11 13/32	(289)
24	24	24	5-10 7/32	(1784)	1-1 13/32	(340)
24	26	24	6-0 7/32	(1835)	1-1 13/32	(340)
24	28	24	6-2 7/32	(1885)	1-1 13/32	(340)
24	30	24	6-4 7/32	(1936)	1-1 13/32	(340)
24	32	24	6-6 7/32	(1987)	1-1 13/32	(340)
24	36	24	6-10 7/32	(2089)	1-1 13/32	(340)
24	40	24	7-2 7/32	(2190)	1-1 13/32	(340)
24	48	24	7-10 7/32	(2393)	1-1 13/32	(340)
24	56	24	8-6 7/32	(2597)	1-1 13/32	(340)
24	60	24	8-10 7/32	(2698)	1-1 13/32	(340)
24	64	24	9-2 7/32	(2800)	1-1 13/32	(340)
24	72	24	9-10 7/32	(3003)	1-1 13/32	(340)

Call Number (Width)			30° Bay			
Side	Center	Side	RO		Projection	
26	26	26	6-3 11/16	(1923)	1-2 13/32	(366)
26	28	26	6-5 11/16	(1973)	1-2 13/32	(366)
26	30	26	6-7 11/16	(2024)	1-2 13/32	(366)
26	32	26	6-9 11/16	(2075)	1-2 13/32	(366)
26	36	26	7-1 11/16	(2177)	1-2 13/32	(366)
26	40	26	7-5 11/16	(2278)	1-2 13/32	(366)
26	48	26	8-1 11/16	(2481)	1-2 13/32	(366)
26	56	26	8-9 11/16	(2685)	1-2 13/32	(366)
26	60	26	9-1 11/16	(2786)	1-2 13/32	(366)
26	64	26	9-5 11/16	(2888)	1-2 13/32	(366)
26	72	26	10-1 11/16	(3091)	1-2 13/32	(366)
28	28	28	6-9 5/32	(2061)	1-3 13/32	(391)
28	30	28	6-11 5/32	(2112)	1-3 13/32	(391)
28	32	28	7-1 5/32	(2163)	1-3 13/32	(391)
28	36	28	7-5 5/32	(2265)	1-3 13/32	(391)
28	40	28	7-9 5/32	(2366)	1-3 13/32	(391)
28	48	28	8-5 5/32	(2569)	1-3 13/32	(391)
28	56	28	9-1 5/32	(2773)	1-3 13/32	(391)
28	60	28	9-5 5/32	(2874)	1-3 13/32	(391)
28	64	28	9-9 5/32	(2976)	1-3 13/32	(391)
28	72	28	10-5 5/32	(3179)	1-3 13/32	(391)
30	30	30	7-2 5/8	(2200)	1-4 13/32	(416)
30	32	30	7-4 5/8	(2251)	1-4 13/32	(416)
30	36	30	7-8 5/8	(2353)	1-4 13/32	(416)
30	40	30	8-0 5/8	(2454)	1-4 13/32	(416)
30	48	30	8-8 5/8	(2657)	1-4 13/32	(416)
30	56	30	9-4 5/8	(2861)	1-4 13/32	(416)
30	60	30	9-8 5/8	(2962)	1-4 13/32	(416)
30	64	30	10-0 5/8	(3064)	1-4 13/32	(416)
30	72	30	10-8 5/8	(3267)	1-4 13/32	(416)
32	32	32	7-8 3/32	(2339)	1-5 13/32	(442)
32	36	32	8-0 3/32	(2441)	1-5 13/32	(442)
32	40	32	8-4 3/32	(2542)	1-5 13/32	(442)
32	48	32	9-0 3/32	(2745)	1-5 13/32	(442)
32	56	32	9-8 3/32	(2949)	1-5 13/32	(442)
32	60	32	10-0 3/32	(3050)	1-5 13/32	(442)
32	64	32	10-4 3/32	(3152)	1-5 13/32	(442)
32	72	32	11-0 3/32	(3355)	1-5 13/32	(442)
36	36	36	8-7	(2617)	1-7 13/32	(493)
36	40	36	8-11	(2718)	1-7 13/32	(493)
36	48	36	9-7	(2921)	1-7 13/32	(493)
36	56	36	10-3	(3125)	1-7 13/32	(493)
36	60	36	10-7	(3226)	1-7 13/32	(493)
36	64	36	10-11	(3328)	1-7 13/32	(493)
36	72	36	11-7	(3531)	1-7 13/32	(493)

Construction Details / Rough Opening and Projection Calculations: 30° Bay

30-Degree Bay - Wood Ultimate Casement

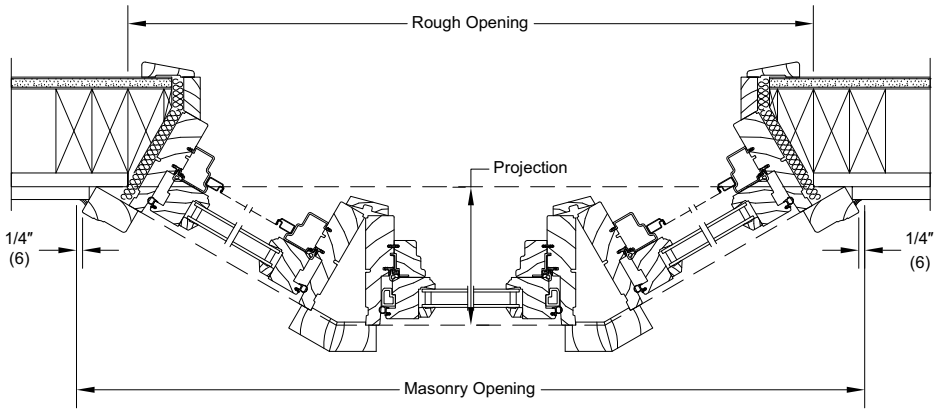

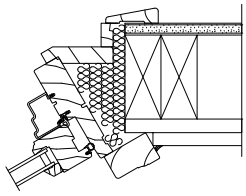

Optional retro fit bay square jamb return for WUCA Bay.

30-Degree Bay - Wood Ultimate Push Out Casement

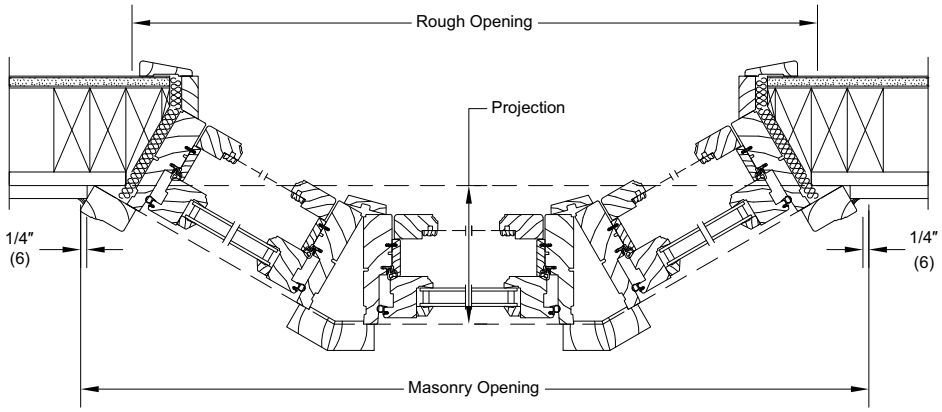

Wood Ultimate Casement Bay **Wood Ultimate Push Out Casement Bay**	
30-Degree	
Projection	OM **width** of flanker unit PLUS 2.785 x 0.5
Rough Opening Width	(Projection x 1.732-1.304) x 2 PLUS 2.445 PLUS OM **width** of Center Unit
Masonry Opening Unit	Add 4 5/16" (110) to Rough Opening **width**
Rough Opening Height (with Head and Seat boards)	OM height on center unit(s) PLUS 1 3/16" (30)
Masonry Opening Height (with Head and Seat boards)	Rough Opening height ADD 11/16" (17)

NOTE: If no head board, Deduct 11/16” (17) from Rough Opening Height.

NOTE: If no seat board, Deduct 11/16” (17) from Rough Opening Height.

NOTE: Use of Wood casing other than 2" (51) will change the Rough Opening and Projection. Contact your Marvin representative for further information.

Standard Width Call Number: WUCABB and WUPCABB-45° Bay

Call Number (Width)			45° Bay			
Side	Center	Side	RO		Projection	
16	16	16	3-7 7/8	(1114)	1-1 3/4	(349)
16	18	16	3-9 7/8	(1165)	1-1 3/4	(349)
16	20	16	3-11 7/8	(1216)	1-1 3/4	(349)
16	24	16	4-3 7/8	(1317)	1-1 3/4	(349)
16	26	16	4-5 7/8	(1368)	1-1 3/4	(349)
16	28	16	4-7 7/8	(1419)	1-1 3/4	(349)
16	30	16	4-9 7/8	(1470)	1-1 3/4	(349)
16	32	16	4-11 7/8	(1521)	1-1 3/4	(349)
16	36	16	5-3 7/8	(1622)	1-1 3/4	(349)
16	40	16	5-7 7/8	(1724)	1-1 3/4	(349)
16	48	16	6-3 7/8	(1927)	1-1 3/4	(349)
16	56	16	6-11 7/8	(2130)	1-1 3/4	(349)
16	60	16	7-3 7/8	(2232)	1-1 3/4	(349)
16	64	16	7-7 7/8	(2333)	1-1 3/4	(349)
16	72	16	8-3 7/8	(2537)	1-1 3/4	(349)
18	18	18	4-0 11/16	(1237)	1-3 5/32	(385)
18	20	18	4-2 11/16	(1288)	1-3 5/32	(385)
18	24	18	4-6 11/16	(1389)	1-3 5/32	(385)
18	26	18	4-8 11/16	(1440)	1-3 5/32	(385)
18	28	18	4-10 11/16	(1491)	1-3 5/32	(385)
18	30	18	5-0 11/16	(1542)	1-3 5/32	(385)
18	32	18	5-2 11/16	(1593)	1-3 5/32	(385)
18	36	18	5-6 11/16	(1694)	1-3 5/32	(385)
18	40	18	5-10 11/16	(1796)	1-3 5/32	(385)
18	48	18	6-6 11/16	(1999)	1-3 5/32	(385)
18	56	18	7-2 11/16	(2202)	1-3 5/32	(385)
18	60	18	7-6 11/16	(2304)	1-3 5/32	(385)
18	64	18	7-10 11/16	(2405)	1-3 5/32	(385)
18	72	18	8-6 11/16	(2609)	1-3 5/32	(385)
20	20	20	4-5 17/32	(1360)	1-4 19/32	(421)
20	24	20	4-9 17/32	(1461)	1-4 19/32	(421)
20	26	20	4-11 17/32	(1512)	1-4 19/32	(421)
20	28	20	5-1 17/32	(1563)	1-4 19/32	(421)
20	30	20	5-3 17/32	(1614)	1-4 19/32	(421)
20	32	20	5-5 17/32	(1664)	1-4 19/32	(421)
20	36	20	5-9 17/32	(1766)	1-4 19/32	(421)
20	40	20	6-1 17/32	(1868)	1-4 19/32	(421)
20	48	20	6-9 17/32	(2071)	1-4 19/32	(421)
20	56	20	7-5 17/32	(2274)	1-4 19/32	(421)
20	60	20	7-9 17/32	(2376)	1-4 19/32	(421)
20	64	20	8-1 17/32	(2477)	1-4 19/32	(421)
20	72	20	8-9 17/32	(2680)	1-4 19/32	(421)
24	24	24	5-3 3/16	(1605)	1-7 13/32	(493)
24	26	24	5-5 3/16	(1656)	1-7 13/32	(493)
24	28	24	5-7 3/16	(1706)	1-7 13/32	(493)
24	30	24	5-9 3/16	(1757)	1-7 13/32	(493)
24	32	24	5-11 3/16	(1808)	1-7 13/32	(493)
24	36	24	6-3 3/16	(1910)	1-7 13/32	(493)
24	40	24	6-7 3/16	(2011)	1-7 13/32	(493)
24	48	24	7-3 3/16	(2214)	1-7 13/32	(493)
24	56	24	7-11 3/16	(2418)	1-7 13/32	(493)
24	60	24	8-3 3/16	(2519)	1-7 13/32	(493)
24	64	24	8-7 3/16	(2621)	1-7 13/32	(493)
24	72	24	9-3 3/16	(2824)	1-7 13/32	(493)

Call Number (Width)			45° Bay			
Side	Center	Side	RO		Projection	
26	26	26	5-8	(1728)	1-8 13/16	(529)
26	28	26	5-10	(1778)	1-8 13/16	(529)
26	30	26	6-0	(1829)	1-8 13/16	(529)
26	32	26	6-2	(1880)	1-8 13/16	(529)
26	36	26	6-6	(1982)	1-8 13/16	(529)
26	40	26	6-10	(2083)	1-8 13/16	(529)
26	48	26	7-6	(2286)	1-8 13/16	(529)
26	56	26	8-2	(2490)	1-8 13/16	(529)
26	60	26	8-6	(2591)	1-8 13/16	(529)
26	64	26	8-10	(2693)	1-8 13/16	(529)
26	72	26	9-6	(2896)	1-8 13/16	(529)
28	28	28	6-0 27/32	(1850)	1-10 1/4	(565)
28	30	28	6-2 27/32	(1901)	1-10 1/4	(565)
28	32	28	6-4 27/32	(1952)	1-10 1/4	(565)
28	36	28	6-8 27/32	(2053)	1-10 1/4	(565)
28	40	28	7-0 27/32	(2155)	1-10 1/4	(565)
28	48	28	7-8 27/32	(2358)	1-10 1/4	(565)
28	56	28	8-4 27/32	(2561)	1-10 1/4	(565)
28	60	28	8-8 27/32	(2663)	1-10 1/4	(565)
28	64	28	9-0 27/32	(2765)	1-10 1/4	(565)
28	72	28	9-8 27/32	(2968)	1-10 1/4	(565)
30	30	30	6-5 21/32	(1973)	1-11 21/32	(601)
30	32	30	6-7 21/32	(2024)	1-11 21/32	(601)
30	36	30	6-11 21/32	(2125)	1-11 21/32	(601)
30	40	30	7-3 21/32	(2227)	1-11 21/32	(601)
30	48	30	7-11 21/32	(2430)	1-11 21/32	(601)
30	56	30	8-7 21/32	(2633)	1-11 21/32	(601)
30	60	30	8-11 21/32	(2735)	1-11 21/32	(601)
30	64	30	9-3 21/32	(2836)	1-11 21/32	(601)
30	72	30	9-11 21/32	(3040)	1-11 21/32	(601)
32	32	32	6-10 1/2	(2095)	2-1 1/16	(637)
32	36	32	7-2 1/2	(2197)	2-1 1/16	(637)
32	40	32	7-6 1/2	(2299)	2-1 1/16	(637)
32	48	32	8-2 1/2	(2502)	2-1 1/16	(637)
32	56	32	8-10 1/2	(2705)	2-1 1/16	(637)
32	60	32	9-2 1/2	(2807)	2-1 1/16	(637)
32	64	32	9-6 1/2	(2908)	2-1 1/16	(637)
32	72	32	10-2 1/2	(3111)	2-1 1/16	(637)
36	36	36	7-8 5/32	(2341)	2-3 29/32	(709)
36	40	36	8-0 5/32	(2442)	2-3 29/32	(709)
36	48	36	8-8 5/32	(2646)	2-3 29/32	(709)
36	56	36	9-4 5/32	(2849)	2-3 29/32	(709)
36	60	36	9-8 5/32	(2950)	2-3 29/32	(709)
36	64	36	10-0 5/32	(3052)	2-3 29/32	(709)
36	72	36	10-8 5/32	(3255)	2-3 29/32	(709)

Construction Details / Rough Opening and Projection Calculations: 45° Bay

45-Degree Bay - Wood Ultimate Casement

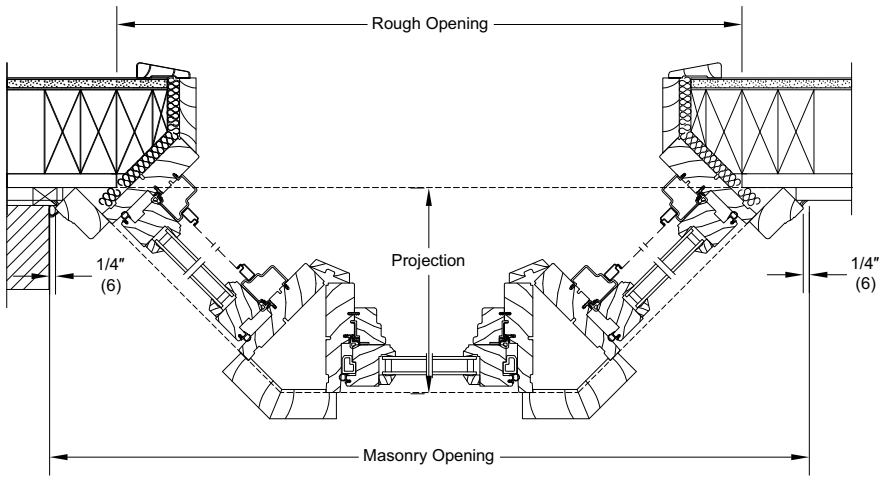

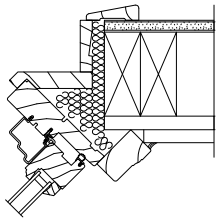

Optional retro fit bay square jamb return for WUCA Bay.

45-Degree Bay - Wood Ultimate Push Out Casement

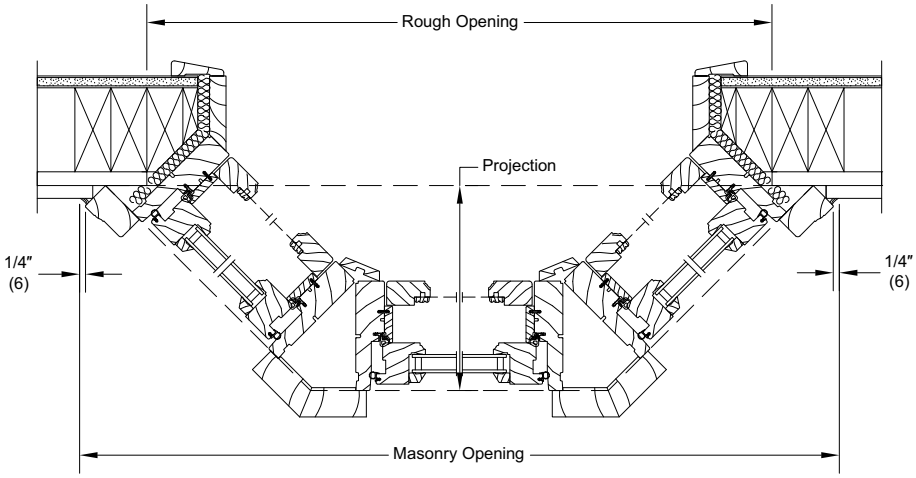

Wood Ultimate Casement Bay **Wood Ultimate Push Out Casement Bay**	
45-Degree	
Projection	OM **width** of flanker unit PLUS 3.452 x 0.707
Rough Opening Width	(Projection minus 1.710) x 2 Plus 3.780 Plus OM **width** of Center Unit
Masonry Opening Width	Add 5 5/8" (143) to Rough Opening **width**
Rough Opening Height (with Head and Seat Boards)	OM height on center unit(s) Plus 1 3/16" (30)
Masonry Opening Height (with Head and Seat Boards)	Rough Opening height add 11/16" (17)

Construction Details / Rough Opening and Projection Calculations: 60° Bay

60-Degree Bay - Wood Ultimate Casement

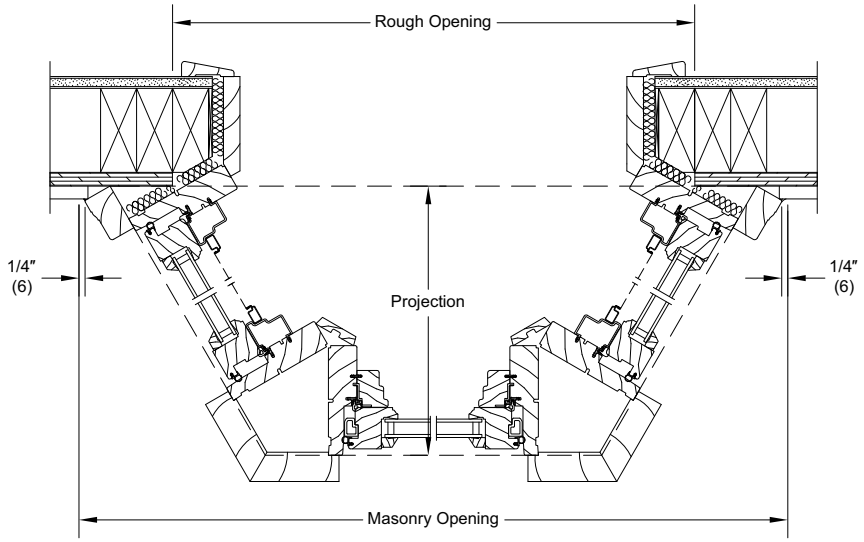

60-Degree Bay - Wood Ultimate Push Out Casement

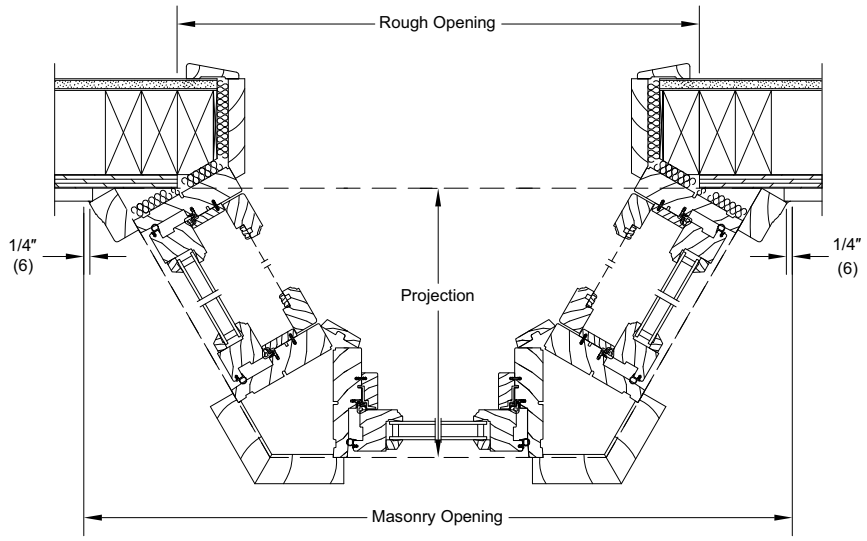

Wood Ultimate Casement Bay **Wood Ultimate Push Out Casement Bay**	
60-Degree	
Projection	OM **width** of flanker unit PLUS 4.197 x 0.866
Rough Opening Width	OM **width** of Center Unit(s) PLUS 1 5/8" (41)
Masonry Opening Unit	Add 7 29/32" (201) to Rough Opening **width**
Rough Opening Height (with Head and Seat boards)	OM height on center unit(s) PLUS 1 3/16" (30)
Masonry Opening Height (with Head and Seat boards)	Rough Opening height ADD 11/16" (17)

NOTE: Use of Wood casing other than 2" (51) will change the Rough Opening and Projection. Contact your Marvin representative for further information.

Construction Details / Rough Opening and Projection Calculations: 90° Bay

90-Degree Bay - Wood Ultimate Casement

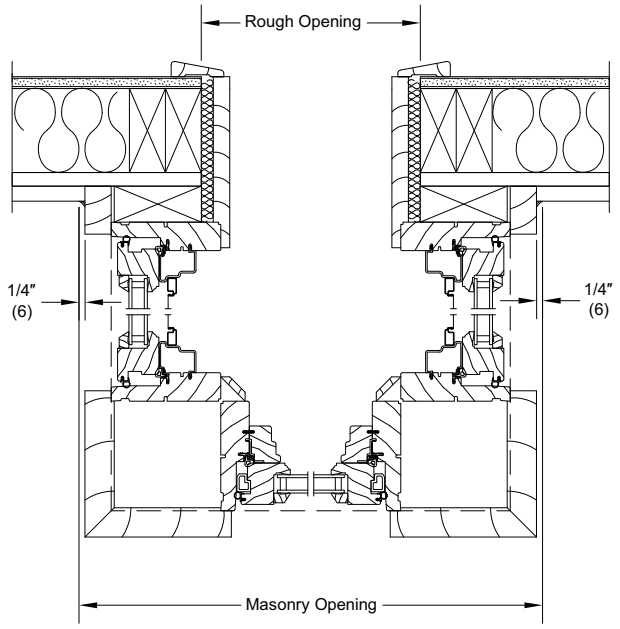

90-Degree Bay - Wood Ultimate Push Out Casement

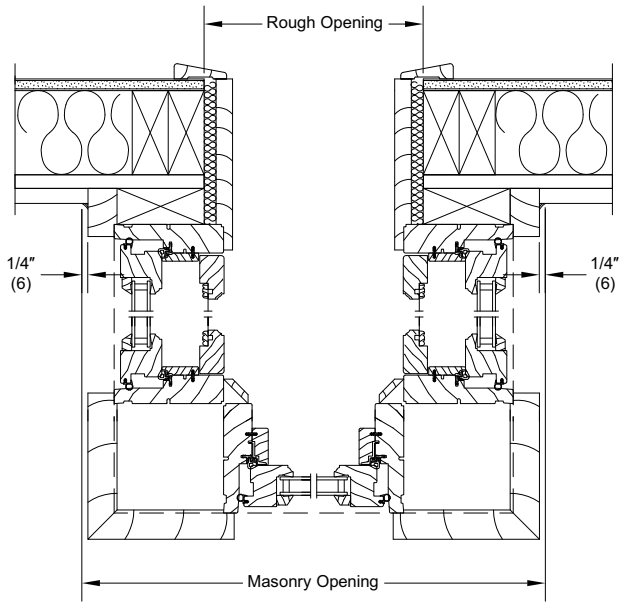

Wood Ultimate Casement Bay **Wood Ultimate Push Out Casement Bay**	
90-Degree	
Projection	OM **width** of flanker unit PLUS 6 1/16" (154)
Rough Opening Width	OM **width** of Center Unit(s) PLUS 1 5/8" (41)
Masonry Opening Unit	Add 10 7/16" (265) to Rough Opening **width**
Rough Opening Height (with Head and Seat boards)	OM height on center unit(s) PLUS 1 3/16" (30)
Masonry Opening Height (with Head and Seat boards)	Rough Opening height ADD 11/16" (17)

NOTE: Use of Wood casing other than 2" (51) will change the Rough Opening and Projection. Contact your Marvin representative for further information.