Wood Tilt Pacs

Unit Features 1
Divided Lite Options 2
Min and Max Glass Size 4
Measurement Conversions 5
Tilt Pac Measurements 6
Tilt Pac Full Screen Measurements 7
Standard Unit Measurements 8
Double Hung Tilt Pac Parts List 9
Magnum Double Hung Tilt Pac Parts List 10

Unit Features

Wood Tilt Pac: WTP

Wood Magnum Tilt Pac: WMTP

Sash:

- Double Hung Tilt Pac
  - Sash thickness: 1 5/16" (33)
  - Top rail width: 2 15/32" (63)
  - Bottom rail width: 3 3/4" (95)
  - Stile width: 1 25/32" (45)
- Magnum Double Hung Tilt Pac
  - Sash thickness: 1 3/4" (44)
  - Top rail width: 2 1/4" (57)
  - Bottom rail width: 3 1/2" (89)
  - Stile width: 2 1/4" (57)
  - Bottom rail bevel 14 degrees
- Removable exterior glazing stops

Hardware:

- Lock: high pressure zinc die-cast cam lock and keeper
  - Optional keyed lock
  - Two locks on glass sizes of 36" (914) and wider
  - Color: Satin Taupe
    - Optional: Bronze, White, Plated brass
- Double Hung Tilt Pac balance system: coil spring block and tackle with nylon cord and fiber filled nylon clutch
- Double Hung Magnum Tilt Pac: double coil spring block and tackle with nylon cord and fiber filled nylon clutch
- Jamb track: vinyl extrusion, foam backing
  - Color: Beige or White
- Sash retainer plate: standard for magnum units, optional for double hung - polycarbonate theroplastic
  - Color: Bronze or White
- Optional sash lifts: high pressure zinc die-cast
  - Color: Satin Taupe
    - Optional: Bronze, White or Brass

Weather Strip:

- Double Hung weather strip: dual durometer double leaf at check rail; bulb type dual durometer weather strip at bottom rail
- Double Hung Magnum weather strip: continuous leaf weather strip at head jamb parting stop which seals against top sash; dual durometer double leaf at check rail; bulb type dual durometer weather strip at bottom rail
- Color: beige

Insect Screens:

- Full sized wood screen is standard
  - Optional wood half screen, or aluminum full or half screen
  - All screens are shipped loose
  - Aluminum screen colors: Pebble Gray, Bahama Brown, Evergreen, Bronze, Stone White, Ebony, Cobalt Blue, Wineberry, Coconut Cream, Hampton Sage, Cashmere, Arctic White, Cumulus Gray, Desert Beige, Sherwood Green, Sierra White, Cadet Gray, Cascade Blue, or French Vanilla
  - Screen Mesh: Charcoal fiberglass
  - Optional Screen Mesh: Charcoal Aluminum Wire, Black Aluminum Wire, Bright Aluminum Wire, Bright Bronze Wire or Charcoal High Transparency (CH Hi-Tran) fiberglass

Glass and Glazing:

- Glazing method: single glaze, single glazed with energy panel or hermetically sealed insulated glass
- Glazing seal: silicone glazed
- Standard glass is insulating LoĒ^{2}-272® with Argon or Air
- Optional glazing available: LoĒ-180™ with or without Argon, LoĒ^{3}-366® with or without Argon, clear, tints, tempered, obscure
- Insulated glass will be altitude adjusted for higher elevations, Argon gas not included

Divided Lite Options

Insulating Glass

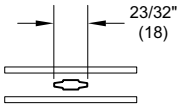

Aluminum 11/16" Contour GBG

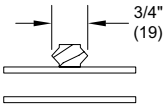

3/4" Grille

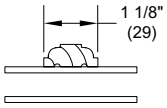

1 1/8" Grille

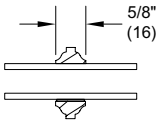

5/8" SDL

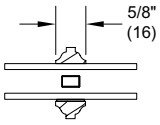

5/8" SDL W/Spacer

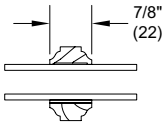

7/8" SDL

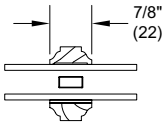

7/8" SDL W/Spacer Bar

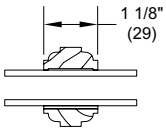

1 1/8" SDL

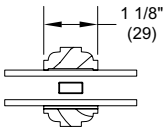

1 1/8" SDL W/Spacer Bar

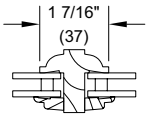

1 7/16" IG ADL

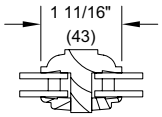

1 11/16" IG ADL

Divided Lite Options

Single Glaze

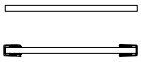

Single Glaze
W/ Energy Panel

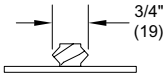

3/4" Grille

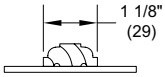

1 1/8" Grille

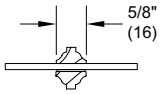

5/8" SDL

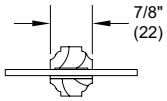

7/8" SDL

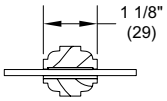

1 1/8" SDL

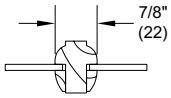

7/8" SG-ADL

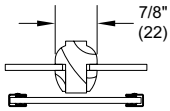

7/8" SG-ADL
W/ Energy Panel

Min and Max Glass Size

Unit Type		Min Glass Size				Max Glass Size				Max Glass Size	
		Width		Height		Widht		Height			
		in	mm	in	mm	in	mm	in	mm	Sq. Feet	Sq. Meters
Double Hung Tilt Pac	Insulating Glass	8	(203)	8	(203)	44	(1118)	48	(1219)	10	0.929
Double Hung Tilt Pac	Single Glaze	8	(203)	8	(203)	44	(1118)	48	(1219)	12	1.115
Magnum Double Hung Tilt Pac	Insulating Glass	12	(305)	12	(305)	60	(1524)	60	(1524)	18 1/2	1.719
Magnum Double Hung Tilt Pac	Single Glaze	12	(305)	12	(305)	60	(1524)	64	(1626)	18 1/2	1.719

NOTE: When glass height exceeds 48" (1219), top sash will be stationary and bottom sash will have limited travel. Maximum sash weight is 70 lbs per sash.

Measurement Conversions

Double Hung Tilt Pac						
Unit Measurements		Width		Height		
From	To					
Daylight Opening		**in**	**mm**		**in**	**mm**
Daylight Opening	Sash Opening	+ 5 1/16	(129)	× 2	+ 8 1/8	(206)
Daylight Opening	Outside Measurement Bottom Sash	+ 3 9/16	(90)		+ 5 9/16	(141)
Daylight Opening	Outside Measurement Top Sash	+ 3 9/16	(91)		+ 4 5/32	(106)
Outside Measurement		**in**	**mm**		**in**	**mm**
Outside Measurement Top Sash	Outside Measurement Bottom Sash				+ 1 13/32	(36)
Outside Measurement Top Sash	Sash Opening	+ 1 1/2	(38)	× 2	-3/16	(05)
Outside Measurement Bottom Sash	Sash Opening	+ 1 1/2	(38)	× 2	-3	(76)

Double Hung Magnum Tilt Pac						
Unit Measurements		Width		Height		
From	To					
Daylight Opening		**in**	**mm**		**in**	**mm**
Daylight Opening	Sash Opening	+ 6 13/16	(173)	× 2	+ 8	(203)
Daylight Opening	Outside Measurement Bottom Sash	+ 4 1/2	(114)		+ 5 19/32	(142)
Daylight Opening	Outside Measurement Top Sash	+ 4 1/2	(114)		+ 3 31/32	(101)
Outside Measurement		**in**	**mm**		**in**	**mm**
Outside Measurement Top Sash	Outside Measurement Bottom Sash				+ 1 5/8	(41)
Outside Measurement Top Sash	Sash Opening	+ 2 5/16	(59)	× 2	-1/16	(02)
Outside Measurement Bottom Sash	Sash Opening	+ 2 5/16	(59)	× 2	-3 3/16	(81)

Tilt Pac Measurements

Scale: 3" = 1'0"

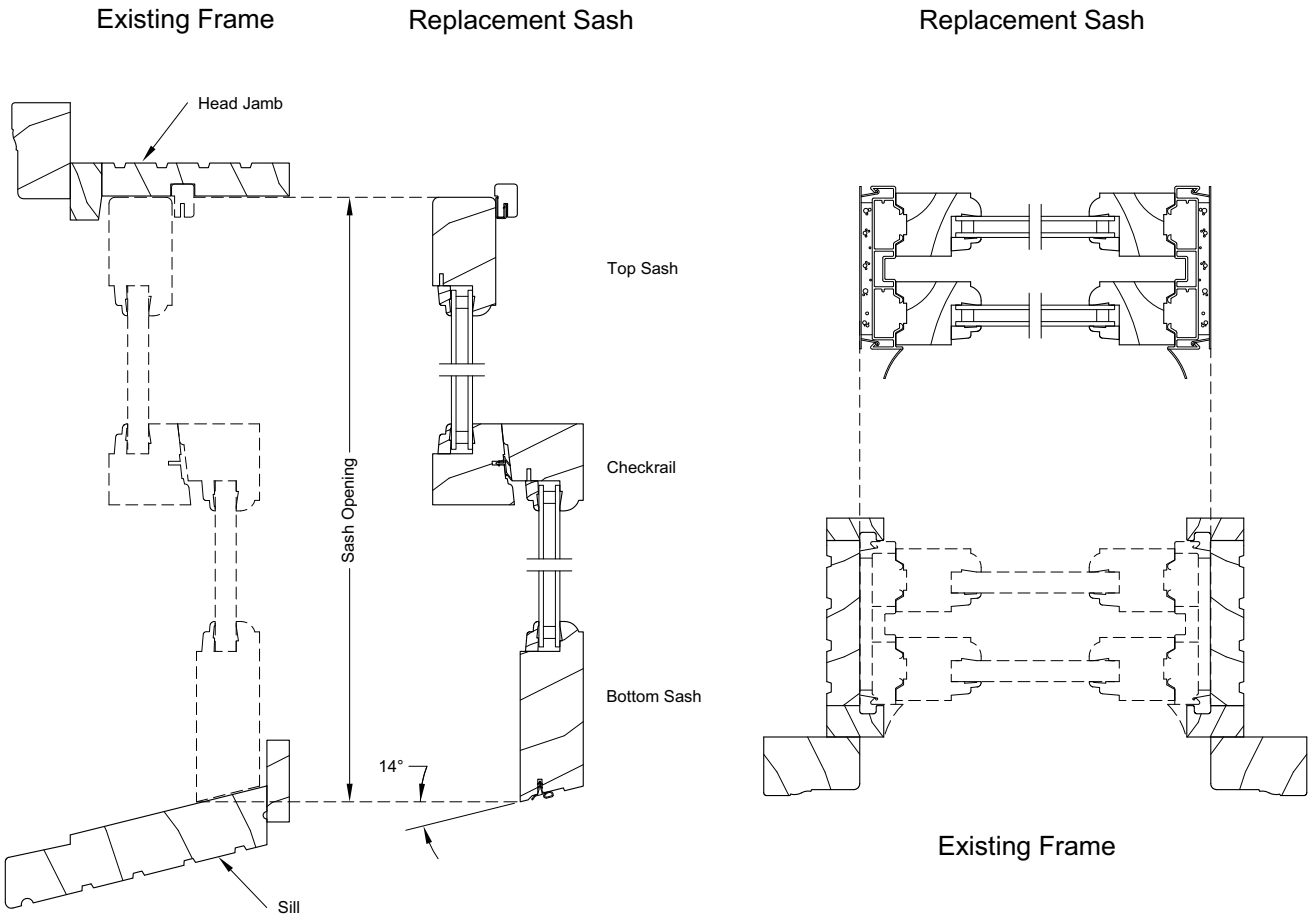

Instructions:

Follow these steps to measure an opening for Tilt Pac Replacement Sash

1. To find the sash opening height:
   If the old window has Wood blocks holding the top sash in place, remove them. Lower the top sash for measuring clearance, then measure the height of the window from where the top sash meets the head jamb to where the bottom sash meets the sill when the bottom sash is fully closed.
2. To find the sash opening width:
   Take an inside measurement of the frame from jamb to jamb.
3. To find the sill angle:
   Raise the bottom sash and place a carpenter's protractor on the sill, the angle will register. Marvin's standard bottom rail is 14 degrees, other angles must be specified.

NOTE: Double Hung sash shown above. Instructions and measuring locations apply to Single Hung, Magnum Double / Single Hung sash.

Tilt Pac Full Screen Measurements

Scale: 3" = 1'0"

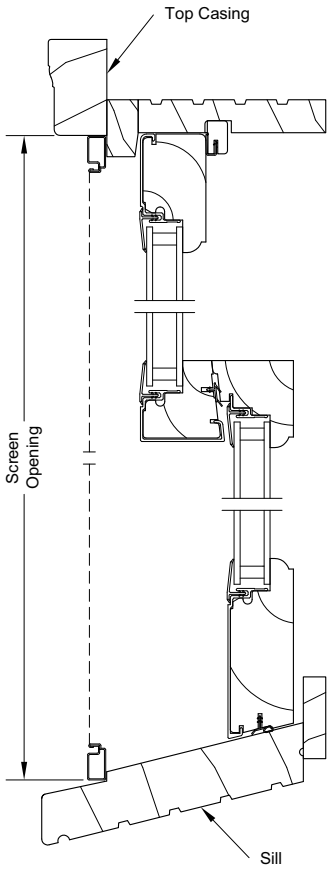

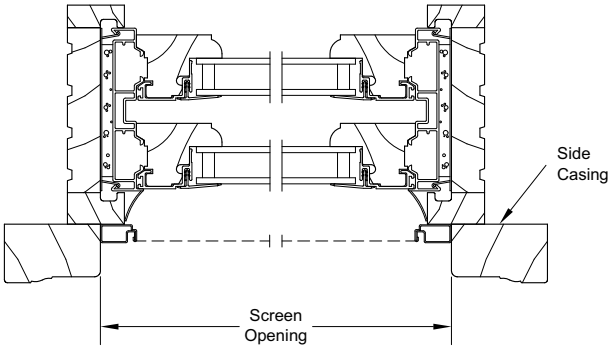

Instructions:

To insure a proper screen fit, it is recommended to order a screen after the Tilt Pac installation.

1. To find the screen opening height:
   Measure from the top casing to the edge of where the screen will rest at the sill, minus 3/32 (2) for the outside measurement (OSM) of the screen height.
2. To find the screen opening width:
   Measure from the inside edge of the side casing to the inside edge of the opposite side casing, minus 1/8 (3) for the outside measurement (OSM) of the screen width.

NOTE: Double Hung sash and screen are shown above. Instruction and measuring locations apply to Single Hung, Magnum Double Hung/Single Hung Sash. Screen measuring instructions also apply to Combination Storm/Screen measurement. Standard angle on combination bottom rails is 14 degrees, other angles must be specified.

Standard Unit Measurements

Tilt Pac Unit Measurements						
Width						
CN	Sash Opening		Daylight Opening Double Hung Tilt Pac		Daylight Opening Double Hung Magnum Tilt Pac	
	ft - in	mm	ft - in	mm	ft - in	mm
16	1-8	(508)	1-2 15/16	(379)	1-1 3/16	(13)
20	2-0	(610)	1-6 15/16	(481)	1-5 3/16	(17)
24	2-4	(711)	1-10 15/16	(583)	1-9 3/16	(21)
26	2-6	(762)	2-0 15/16	(633)	1-11 3/16	(23)
28	2-8	(813)	2-2 15/16	(684)	2-1 3/16	(25)
30	2-10	(864)	2-4 15/16	(735)	2-3 3/16	(27)
32	3-0	(914)	2-6 15/16	(786)	2-5 3/16	(29)
36	3-4	(1016)	2-10 15/16	(887)	2-9 3/16	(33)

Tilt Pac Unit Measurements						
Height						
CN	Sash Opening		Daylight Opening Double Hung Tilt Pac		Daylight Opening Double Hung Magnum Tilt Pac	
	ft - in	mm	ft - in	mm	ft - in	mm
12	2-6	(762)	0-10 15/16	(278)	0-11	(11)
14	2-10	(864)	1-0 15/16	(329)	1-1	(13)
16	3-2	(965)	1-2 15/16	(379)	1-3	(15)
18	3-6	(1067)	1-4 15/16	(430)	1-5	(17)
20	3-10	(1168)	1-6 15/16	(481)	1-7	(19)
22	4-2	(1270)	1-8 15/16	(532)	1-9	(21)
24	4-6	(1372)	1-10 15/16	(583)	1-11	(23)
26	4-10	(1473)	2-0 15/16	(633)	2-1	(25)
28	5-2	(1575)	2-2 15/16	(684)	2-3	(27)
30	5-6	(1676)	2-4 15/16	(735)	2-5	(29)
32	5-10	(1778)	2-6 15/16	(786)	2-7	(31)
34	6-2	(1880)	2-8 15/16	(837)	2-9	(33)
36	6-6	(1981)	2-10 15/16	(887)	2-11	(35)

Double Hung Tilt Pac Parts List

Double Hung Tilt Pac

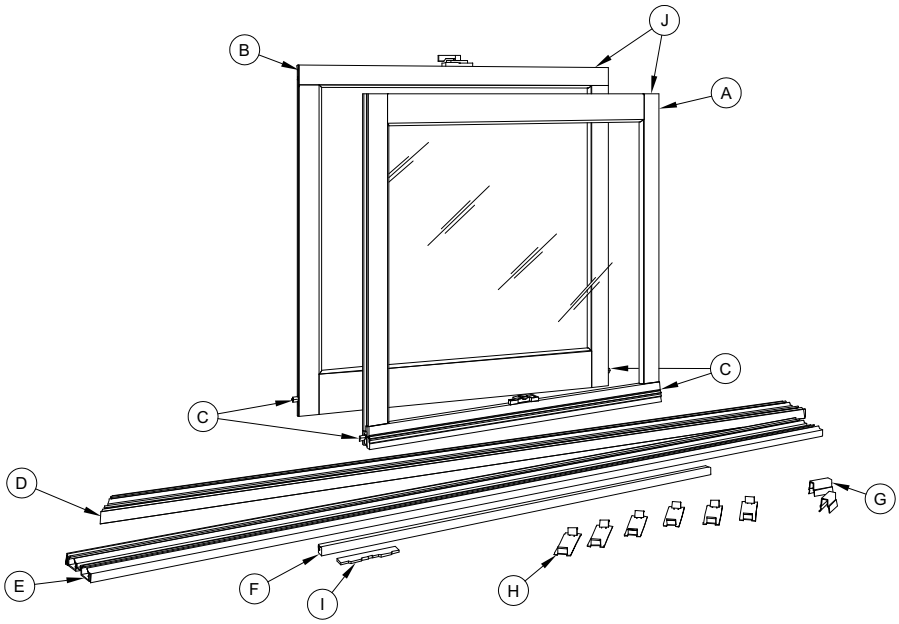

A. Top Sash

B. Bottom Sash

C. Cam Pivots

D. Left Vinyl Jamb Liner

E. Right Vinyl Jamb Liner

F. Head Jamb Part Stop

G. Two Plastic Sash Stops

H. Metal Brackets (quantity varies)

I. Two foam gaskets

Single Hung Tilt Pac

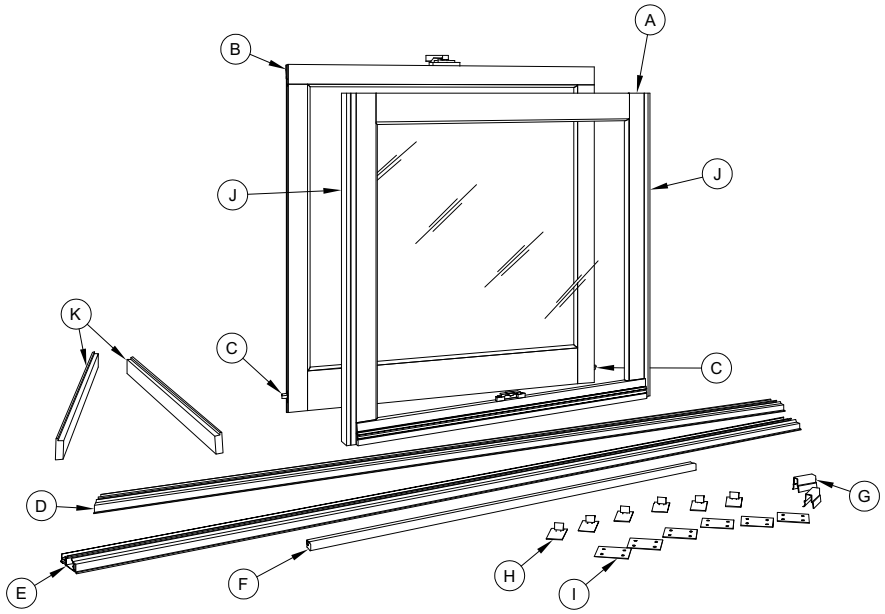

A. Top Sash

B. Bottom Sash

C. Cam Pivots

D. Left Vinyl Jamb Liner

E. Right Vinyl Jamb Liner

F. Head Jamb Part Stop

G. Two Plastic Sash Stops

H. Metal Brackets (quanity varies)

I. Stationary Sash Bracket (quanity may vary)

J. Sash Filler

K. Sash Opening Filler

Magnum Double Hung Tilt Pac Parts List

ILLUSTRATIVE PURPO

Magnum Double Hung Tilt Pac

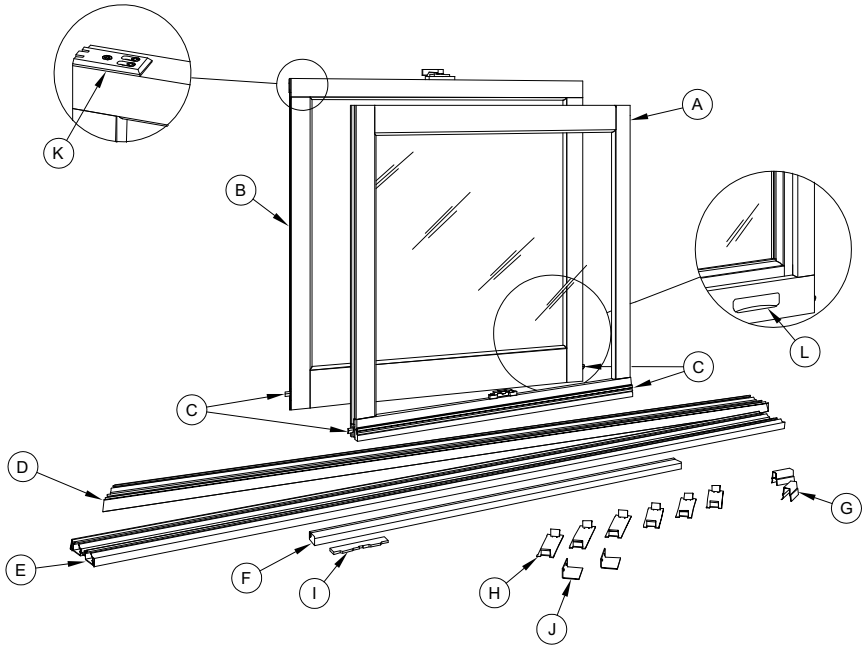

A. Top Sash

B. Bottom Sash

C. Cam Pivots

D. Left Vinyl Jamb Liner

E. Right Vinyl Jamb Liner

F. Head Jamb Part Stop

G. Two Plastic Sash Stops

H. Metal Brackets (quantity varies)

I. Two foam gaskets

J. Two Top Sash Stays

K. Two Sash Retainer Plates
(NOTE: Only on Magnum Tilt Pacs)

L. Finger Pulls
(NOTE: Only on Magnum Historical Tilt Pacs

Magnum Single Hung Tilt Pac

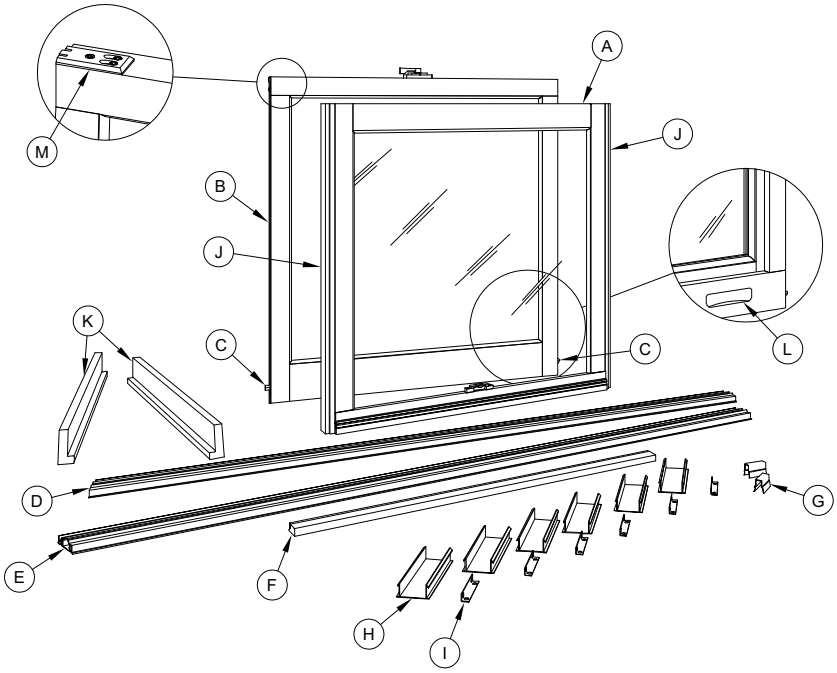

A. Top Sash

B. Bottom Sash

C. Cam Pivots

D. Left Vinyl Jamb Liner

E. Right Vinyl Jamb Liner

F. Head Jamb Part Stop

G. Two Plastic Sash Stops

H. Vinyl Hardware Clips
(Amount varies with unit size)

I. Stationary Sash Brackets
(Amount varies with unit size)

J. Stationary Sash Filler

K. Sash Opening Filler

L. Finger Pulls
(NOTE: Only on Magnum Historical Tilt Pacs

M. Two Sash Retainer Plates
(NOTE: Only on Magnum Tilt Pacs)