Wood Ultimate Insert Double Hung

Unit Features 1
Standard Insulating Glass Divided Lite Options 3
Standard Single Glaze Divided Lite Options 4
Optional Interior Square Simulated Divided Lite Options 5
Egress and Vent Openings 6
Minimum and Maximum Guidelines and Oversize Limits 7
Certified Sizes and Ratings 8
Measurement Conversions: Operators 9
Measurement Conversions: Transom and Picture 10
Measurement Conversions: Field Measurement 11
Section Details: Mullions 15

Unit Features

Wood Ultimate Insert Double Hung: WINDH

Wood Ultimate Transom Windows: WINDHT

Wood Ultimate Picture Windows: WINDHP

Frame:

- Depth is 4 9/16″ (116)
- 11/16″ (17) thick at head and side jambs, 1″ (25) at sill which has an 8° bevel
- Optional flat sill that is 1 7/16″ (37)

Sash:

- Sash thickness for operable units and transom: 1 5/8″ (41). Sash thickness for a picture unit is 1 5/8 (41) or 2″ (51).
- Operating sash are removable for cleaning, service and finishing.
- Incorporates traditional wide bottom rail in bottom sash - 3 9/16" (90).
- Single Hung conversion kits available. Cottage and Oriel sash configuration available.

Hardware:

- Sash lock and keeper: Open style crescent cam lock with sash release lever, surface mounted. Color: Satin Taupe. Optional colors: Bronze, White, Brass, Antique Brass, Satin Chrome, Satin Nickel and Oil Rubbed Bronze.
- Balance system: block and tackle coil spring.
- The jamb track is a vinyl extrusion. Color: Beige. Optional color: White.

Weather Strip:

- Jamb weather strip is a foam type weather strip which seals against both the bottom sash and top sash stiles.
- Top sash has a weather strip on the check rail that seals to the bottom sash check rail when the sash lock is engaged.
- The top rail seals against a weather strip on the head jamb parting stop.
- The bottom sash has a weather strip on the bottom of the lower rail which seals against the sill.

Insect Screens:

- Aluminum screen: Full screen standard, half screen optional. Colors available: Pebble Gray, Bahama Brown, Evergreen, Bronze, Stone White, Ebony, Cobalt Blue, Wineberry, Coconut Cream, Hampton Sage, Cashmere, Arctic White, Cumulus Gray, Desert Beige, Sherwood Green, Sierra White, Cadet Gray, Cascade Blue, or French Vanilla.
- Screen mesh: Standard is Charcoal Fiberglass. Optional: Charcoal High Transparency Fiberglass Mesh, Charcoal Aluminum Wire, Black Aluminum Wire, Bright Aluminum Wire, or Bright Bronze Aluminum Wire.
- Screens have an aluminum crossbar on glass heights of 20" (508) and taller.
- Optional Double Hung Magnum Screen, extruded aluminum.
- Optional wood screen.

Glass:

- Glazing seal: Silicone glazed.
- Standard glass is insulating Low E2 Argon or Air.
- Insulating glass will be altitude adjusted with capillary tubes for higher elevations. Argon gas is not available for elevations that require capillary tubes.

Optional Glass

- Low E1 Argon or Air, Low E3 Argon or Air, clear, tints, tempered, obscure and others.
- Low E3 Argon or Air, Low E1 Argon or Air, Laminated, Tempered, Obscure, Bronze tint, Gray tint, Reflective Bronze, Decorative glass options or clear.
- 1" Tripane Low E1 outer piece and Low E1 Argon inner piece
- 1" Tripane Low E1 outer piece and Low E1 Krypton-Argon inner piece
- 1" Tripane Low E2 outer piece and Low E2 Argon inner piece
- 1" Tripane Low E2 outer piece and Low E2 Krypton-Argon inner piece
- 1" Tripane Low E3 outer piece and Low E1 Argon inner piece
- 1" Tripane Low E3 outer piece and Low E1 Krypton-Argon inner piece

Unit Features

Accessories:

- Installation Accessories
  - Factory installed vinyl sill fin (8 degree sill option only)
  - Two (2) 5/16″ - #10 x 2 1/2″ jamb jack screws
  - Four (4) #7 x 2″ Phillips pan-head installation screws
  - Two (2) jamb liner check rail pads
  - Two (2) wood flat head plugs (interior).
- Sash Lifts
  - High pressure zinc die-cast.
  - Color: Satin Taupe. Optional colors: Bronze, White, Brass, Antique Brass, Satin Chrome, Satin Nickel and Oil Rubbed Bronze.

Standard Insulating Glass Divided Lite Options

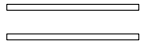

Insulating Glass

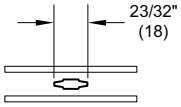

Aluminum 11/16"
Contour GBG

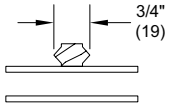

3/4" Grille

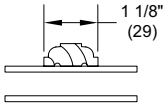

1 1/8" Grille

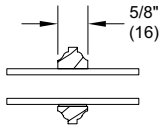

5/8" SDL

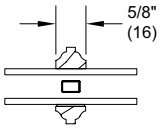

5/8" SDL
W/Spacer

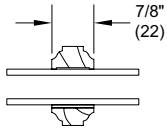

7/8" SDL

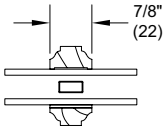

7/8" SDL
W/Spacer Bar

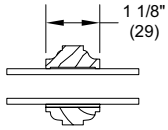

1 1/8" SDL

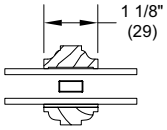

1 1/8" SDL
W/Spacer Bar

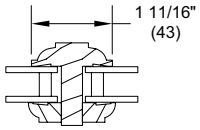

1 11/16" IG ADL

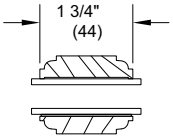

1 3/4" SDL

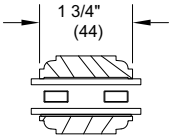

1 3/4" SDL
W/Two Spacer Bars

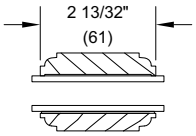

2 13/32" SDL

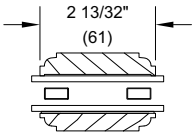

2 13/32" SDL
W/Two Spacer Bar

Standard Single Glaze Divided Lite Options

Single Glaze

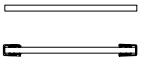

Single Glaze
W/ Energy Panel

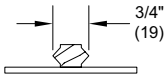

3/4" Grille

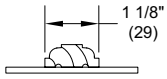

1 1/8" Grille

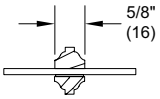

5/8" SDL

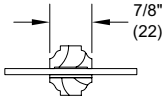

7/8" SDL

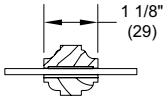

1 1/8" SDL

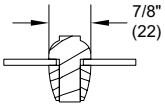

7/8" SG-ADL

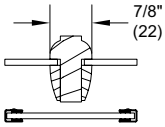

7/8" SG-ADL
W/ Energy Panel

Optional Interior Square Simulated Divided Lite Options

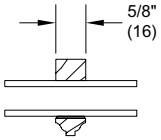

5/8" SDL

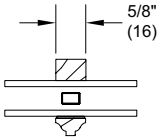

5/8" SDL
W/Spacer

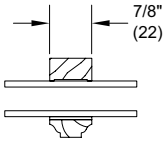

7/8" SDL

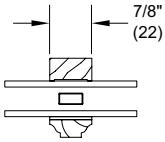

7/8" SDL
W/Spacer Bar

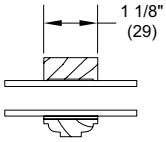

1 1/8" SDL

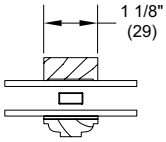

1 1/8" SDL
W/Spacer Bar

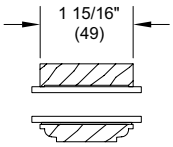

1 15/16" SDL

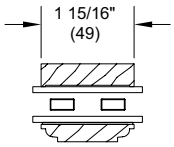

1 15/16" SDL
W/Two Spacer Bars

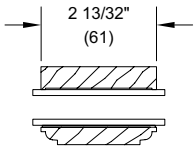

2 13/32" SDL

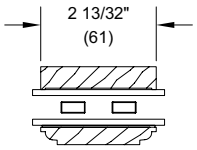

2 13/32" SDL
W/Two Spacer Bar

Egress and Vent Openings

Minimum Egress Requirements					
Inside Opening Width		**Inside Opening Height Flat Sill**		**Inside Opening Height 8 degree**	
in	mm	in	mm	in	mm
29 3/4	(756)	77 1/4	(1962)	76 53/64	(1951)
31 3/4	(806)	73 1/4	(1861)	72 53/64	(1850)
33 3/4	(857)	69 1/4	(1759)	68 53/64	(1748)
35 3/4	(908)	65 1/4	(1657)	64 53/64	(1647)
37 3/4	(959)	61 1/4	(1556)	60 53/64	(1545)
41 3/4	(1060)	61 1/4	(1556)	60 53/64	(1545)
45 3/4	(1162)	61 1/4	(1556)	60 53/64	(1545)

Egress Unit Minimum Opening and Conversion from Frame Size		
Desired Dimension	Formula	Minimum Value for Net Clear Opening
Egress Opening Width (inches)	= WINDH frame OSM width - 3.416	20 inches
Egress Opening Height (inches)	= (WINDH frame OSM height / 2) - 5.3282	24 inches
Egress Opening Area (sq. ft.)	= (Egress Width x Egress Height) / 144	5.7 sq. ft.

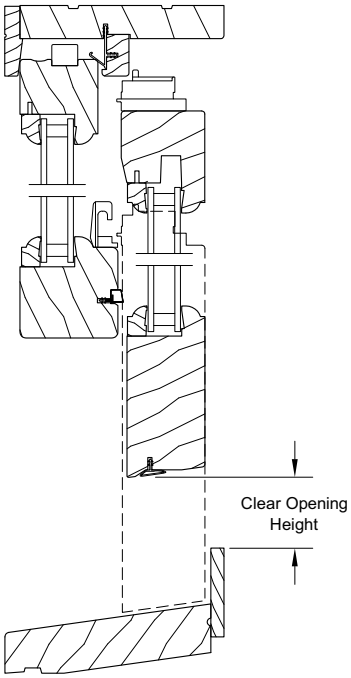

Head Jamb and Sill

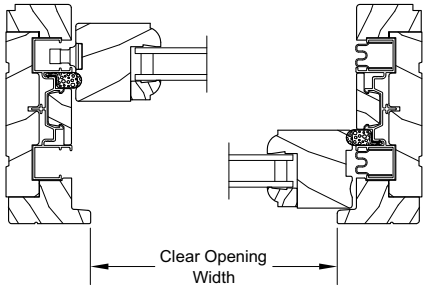

Jambs

Minimum and Maximum Guidelines and Oversize Limits

Minimum and Maximum IO Opening Guidelines															
Unit Type	Sill Type	Min IO Width at Least		Min IO Height Must be at Least		Min IO Width at Least		Min IO Height Must be at Least		Max IO Width		Max IO Height		Max IO Area	
		in	mm	in	mm	in	mm	in	mm	in	mm	in	mm	Sq. Ft	Sq. Mtrs
WINDH	Flat	13 3/4	(349)	32 1/32	(814)	17 3/4	(451)	24 1/32	(610)	44	(1118)	77 39/64	(1971)	23 45/64	(602)
	8°	13 3/4	(349)	31 19/32	(803)	17 3/4	(451)	23 39/64	(600)						
WINDHP	Flat	13 3/4	(349)	18 23/32	(475)	17 3/4	(451)	14 23/32	(374)	68	(1727)	77 39/64	(1971)	36 21/32	(931)
	8°	13 3/4	(349)	18 9/32	(465)	17 3/4	(451)	14 9/32	(363)						
WINDHT	Flat	13 3/4	(349)	17 1/2	(445)	17 3/4	(451)	13 1/2	(343)	44	(1118)	23 3/64	(585)	7 3/64	(179)
	8°	13 3/4	(349)	17 1/16	(434)	17 3/4	(451)	13 1/16	(332)						

NOTE: Some restrictions may apply, contact your Marvin representative with questions.

Oversize Limts						
Unit Type	Maximum IO Width		Maximum IO Height		Maximum IO Area	
	in	mm	in	mm	Sq Feet	Sq Meters
WINDH	48	(1219)	85 39/64	(2174)	23 45/64	2.203
WINDHP	68	(1727)	85 39/64	(2174)	40 7/16	3.756
WINDHT	48	(1219)	23 3/64	(585)	7 11/16	0.713

NOTE: Oversized width and height max for WINDH is available in either width or height but not both.
Oversized units are not certified.

Certified Sizes and Ratings

Product	Air Tested to psf	Water Tested to psf	Structural Tested to psf	Certification Rating	Design Pressure (DP)	Overall Width		Overall Height	
						in	mm	in	mm
Wood Insert Double Hung	1.57	6	60	LC-PG40-H	40	35 3/8	(899)	81	(2057)
Wood Insert Double Hung	1.57	6	60	LC-PG40-H	40	45 3/8	(1153)	61	(1549)
Wood Insert Double Hung	1.57	6	45	LC-PG40-H	40	45 3/8	(1153)	81	(2057)
Wood Insert Double Hung 1 5/8" Picture	1.57	6	60	LC-PG40-FW	40	61 3/8	(1559)	57	(1448)
Wood Insert Double Hung 2" Picture	1.57	6	60	LC-PG40-FW	40	69 3/8	(1762)	81	(2057)
Wood Insert Double Hung Transom	1.57	6	60	LC-PG40-TR	40	73 3/8	(1864)	26 1/2	(673)

Measurement Conversions: Operators

Wood Ultimate Insert Double Hung Operating Unit						
Unit Measurements		Width		Height		
From	To					
Daylight Opening		**in**	**mm**		**in**	**mm**
Daylight Opening	Bottom Sash OM	+ 3 17/32	(90)		+ 5 11/16	(144)
Daylight Opening	Top Sash OM	+ 3 17/32	(90)		+ 3 7/8	(98)
Daylight Opening	Glass OM	+ 1 1/16	(27)		+ 1 1/16	(27)
Daylight Opening	Screen OM	+ 4 13/32	(112)	(DLO x 2)	+ 9 9/32	(236)
Daylight Opening	Grille	order by DLO		order by DLO		

Wood Ultimate Insert Double Hung Operating Unit									
Unit Measurements		Width		Height					
From	To			Flat Bottom Sill			8 Degree Bottom Sill		
Inside Opening		**in**	**mm**	**in**	**mm**		**in**	**mm**	
Inside Opening	Bottom Sash OM	-3 9/32	(83)	-10 9/32	(261)	÷ 2	-9 27/32	(250)	÷ 2
				+ 5 11/16	(98)		+ 5 11/16	(98)	
Inside Opening	Top Sash OM	-3 9/32	(83)	-10 9/32	(261)	÷ 2	-9 13/16	(249)	÷ 2
				+ 3 7/8	(98)		+ 3 7/8	(98)	
Inside Opening	Daylight Opening	-6 13/16	(173)	-10 9/32	(261)	÷ 2	-9 13/16	(249)	÷ 2
Inside Opening	Glass OM	-5 3/4	(146)	-8 5/32	(207)	÷ 2	-7 23/32	(196)	÷ 2
Inside Opening	Screen OM	-1 27/32	(47)	-1	(25)		-9/16	(14)	
Inside Opening	Frame OM @ Interior	-3/8	(09)	-1/4	(06)		-1/4	(06)	
Inside Opening	Frame OM @ Exterior	-3/8	(09)	-1/4	(06)		+ 3/16	(05)	

Measurement Conversions: Transom and Picture

Wood Ultimate Insert Double Hung Transoms					
Unit Measurements		Width		Height (not affected by sill)	
From	To				
Daylight Opening		**in**	**mm**	**in**	**mm**
Daylight Opening	Sash OM	+ 3 17/32	(90)	+ 4 11/32	(110)
Daylight Opening	Glass OM	+ 1 1/16	(27)	+ 1 1/16	(27)
Daylight Opening	Grille	order by DLO		order by DLO	

Unit Measurements		Width		Height			
From	To			Flat Sill Bottom		8 Degree Sill Bottom	
Inside Opening		**in**	**mm**	**in**	**mm**	**in**	**mm**
Inside Opening	Sash OM	-3 9/32	(83)	-2 11/32	(60)	-1 29/32	(48)
Inside Opening	Daylight Opening	-6 13/16	(173)	-6 11/16	(170)	-6 1/4	(159)
Inside Opening	Glass OM	-5 3/4	(146)	-5 5/8	(143)	-5 3/16	(132)
Inside Opening	Frame OM @ Interior	-3/8	(09)	-1/4	(06)	-1/4	(06)
Inside Opening	Frame OM @ Exterior	-3/8	(09)	-1/4	(06)	+ 3/16	(05)

Wood Ultimate Insert Double Hung Picture					
Unit Measurements		Width		Height (not affected by sill type)	
From	To				
Daylight Opening		**in**	**mm**	**in**	**mm**
Daylight Opening	Sash OM	+ 4 7/8	(124)	+ 5 21/32	(144)
Daylight Opening	Glass OM	+ 1 3/16	(30)	+ 1 3/16	(30)
Daylight Opening	Grille	order by DLO		order by DLO	

Unit Measurements		Width		Height			
From	To			Flat Sill Bottom		8 Degree Sill Bottom	
Inside Opening		**in**	**mm**	**in**	**mm**	**in**	**mm**
Inside Opening	OM of BMC	-1 15/16	(49)	-2 1/4	(57)	-1 13/16	(46)
Inside Opening	OM of Flat Casing	-6 13/16	(173)	-7 29/32	(201)	-7 15/32	(190)
Inside Opening	Daylight Opening	-5 5/8	(143)	-6 23/32	(171)	-6 9/32	(160)
Inside Opening	OM of Frame	-3/8	(09)	-1/4	(06)	-1/4	(06)
Inside Opening	Daylight Opening	-3/8	(09)	-1/4	(06)	+ 3/16	(05)

Measurement Conversions: Field Measurement

Conversion from Field Measurement to Frame OM		
Width		
Condition	Formula	
If blind stop width is 1/2 inch or less	WINDH frame OM width = inside opening width - 0.375	
Height		
Condition	Type of Sill	Formula
If old sill angle is less than 8 degrees	Flat bottom Sill	WINDH frame OM height = inside opening height - 0.250
If old sill angle is equal to or greater than 8 degrees	8 degree bottom sill	WINDH frame OM height = inside opening height + 0.180

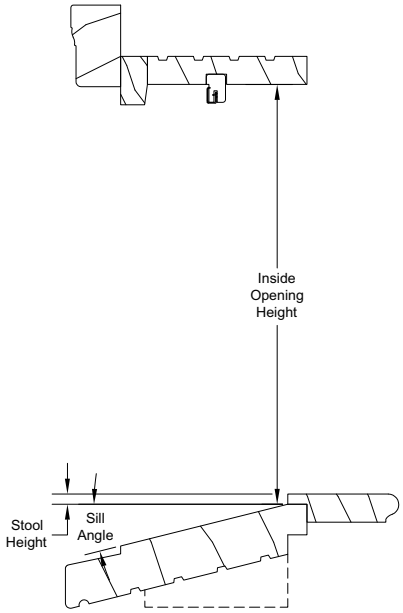

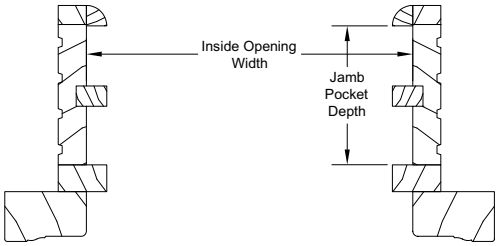

NOTE: For additional measuring instructions see Marvin Insert Window Measuring Instructions.

Section Details: Operator

Scale: 3" = 1' 0"

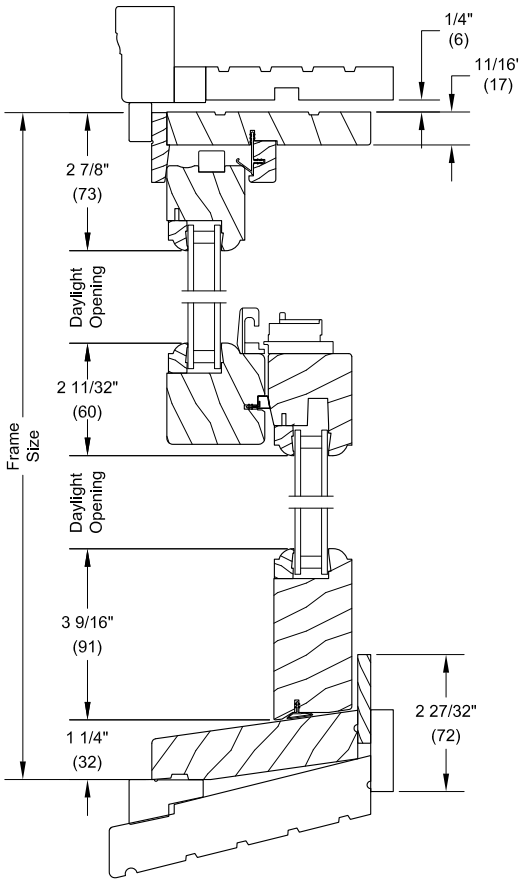

Head Jamb, Checkrail, with Beveled Sill installed in existing frame

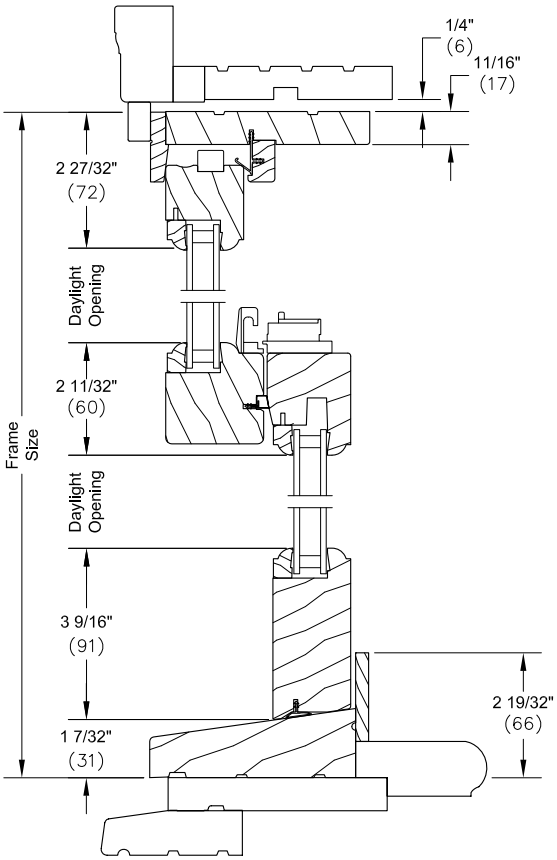

Head Jamb, Checkrail, with Flat Sill Option installed in existing frame

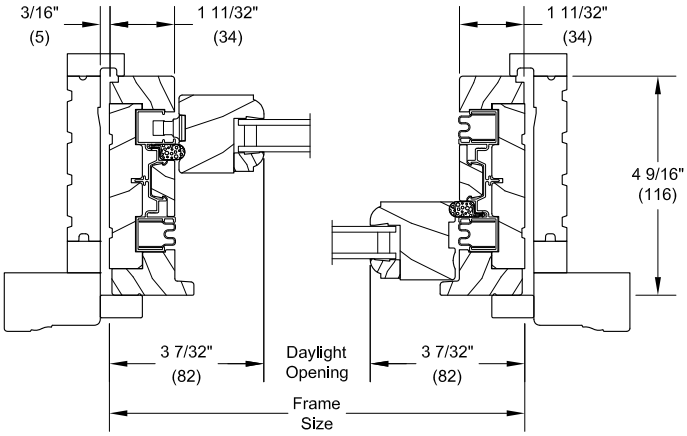

Jambs installed in existing frame

Section Details: Transom

Scale: 3" = 1' 0"

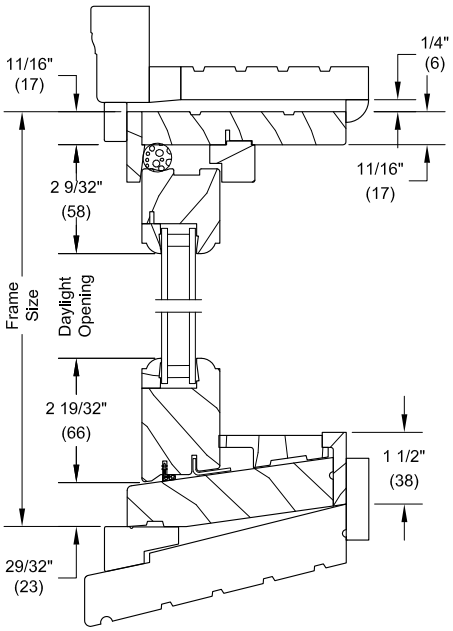

Transom Head Jamb with Beveled Sill installed in existing frame

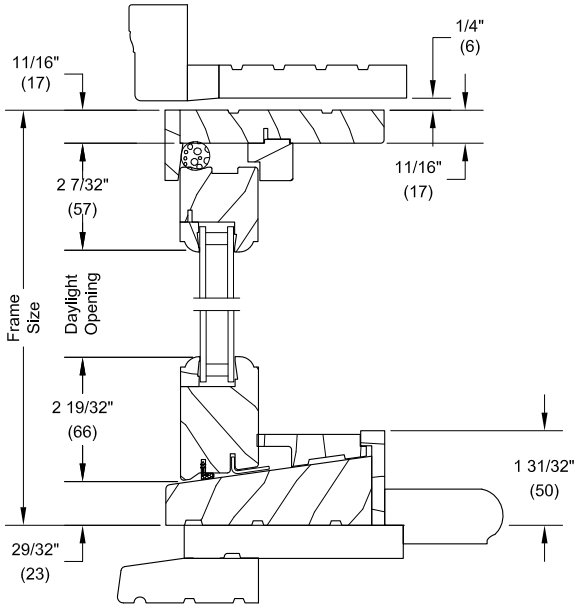

Transom Head Jamb with Flat Sill Option installed in existing frame

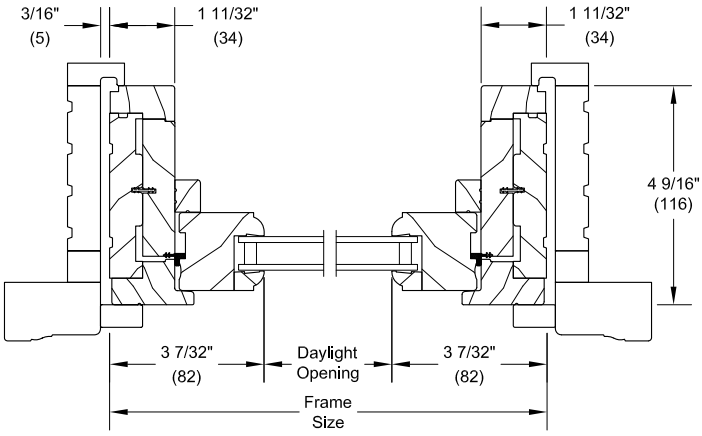

Transom Jambs installed in existing frame

Section Details: Picture

Scale: 3" = 1' 0"

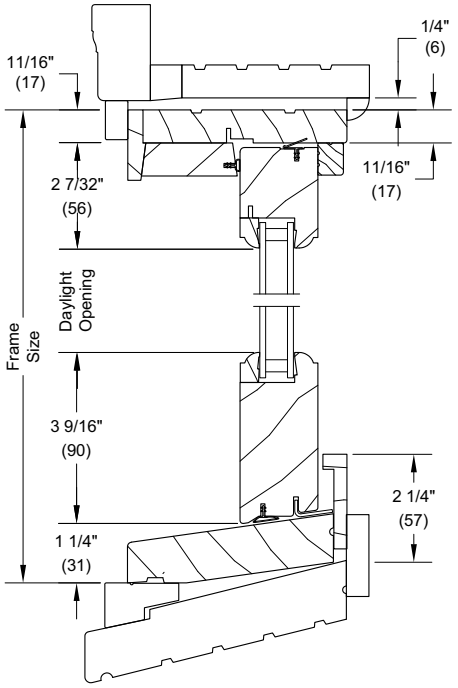

Picture Head Jamb with Beveled Sill installed in existing frame

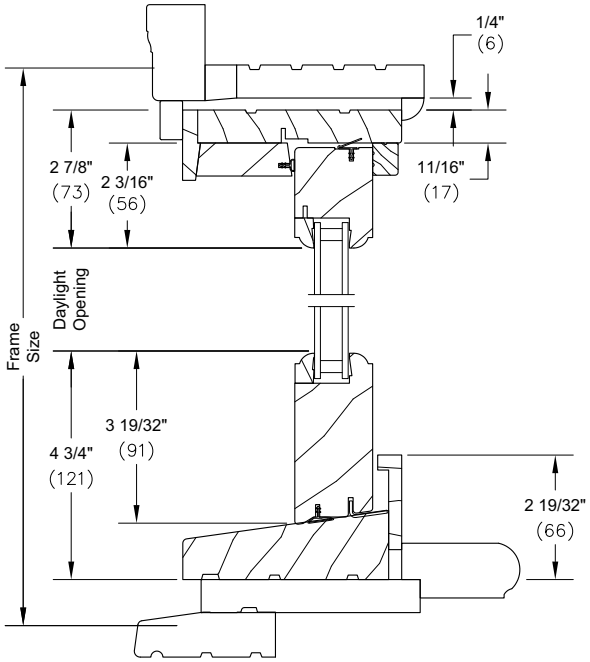

Picture Head Jamb with Flat Sill Option installed in existing frame

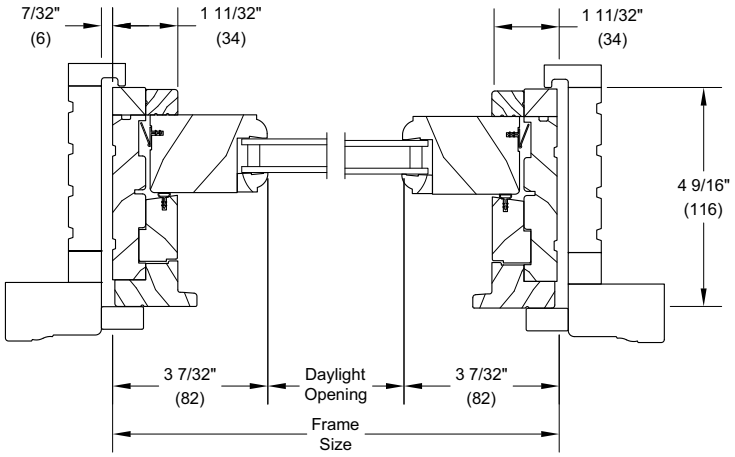

Jambs

Section Details: Mullions

Scale: 3" - 1' 0"

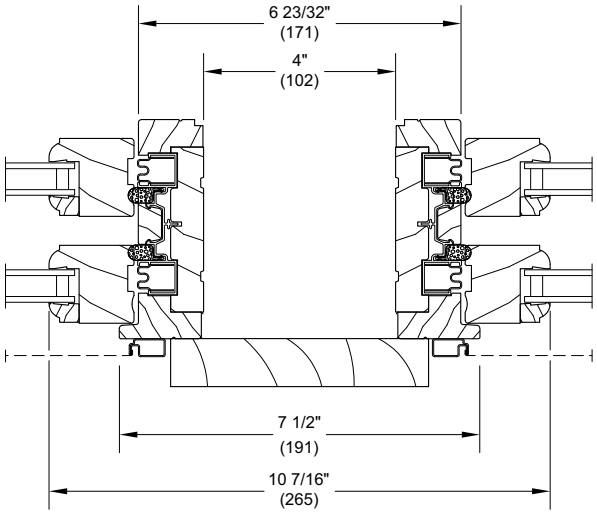

Vertical Mullion - with 4" Space Mull
Operator/Operator

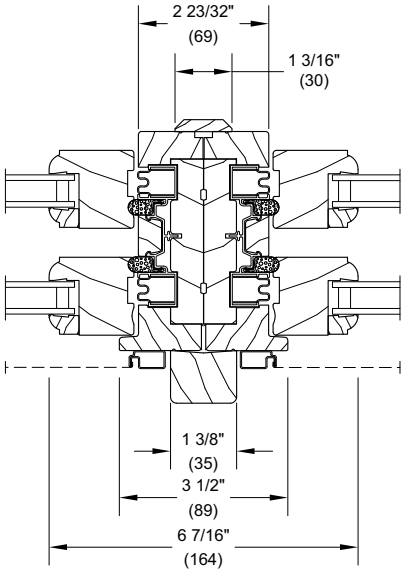

Vertical Mullion
Operator/Operator/Direct Mull

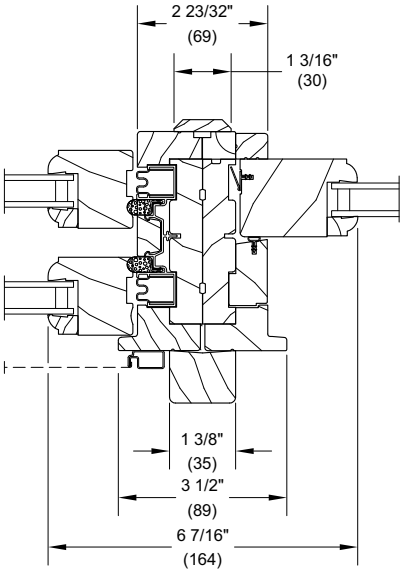

Vertical Mullion
Operator/Picture/Direct Mull