Wood Direct Glaze Polygon and Round Top

Unit Features: Wood Direct Glaze Polygon 1
Min/Max Guidelines and Certified Sizes: Standard Wood Direct Glaze Polygon 3
Minimum and Maximum Guidelines: Interior Shades 5
Certified Sizes and Ratings: Standard Units and Impact 6
Measurement Conversions: Wood Direct Glaze Polygon 7
Slope To Angle and Angle to Pitch Conversion - Wood Direct Glaze Polygon 8
Section Details: Wood Direct Glaze Polygon 9
Section Details: Wood Direct Glaze Polygon - IZ3 10
Section Details: Interior Shade Option 11
Section Details: Wood Direct Glaze Polygon Mullion Options 12
Polygon Shape Reference 13
Unit Features: Wood Direct Glaze Round Top 14
Min/Max Guidelines: Wood Direct Glaze Round Top 15
Certified Sizes: Wood Direct Glaze Round Top 17
Measurement Conversions: Wood Direct Glaze Round Top 18
Standard Sizes: Wood Ultimate Casement - Full Circle and Ellipse Series 19
Standard Sizes: Wood Ultimate Casement - True Half, Elliptical and Quarter Circle 20
Standard Sizes: Clad Ultimate Casement - Eyebrow above Springline 21
Standard Sizes: Wood Ultimate Double Hung - True Half Circle and Elliptical Direct Glaze 23
Standard Sizes: Wood Ultimate Double Hung - Eyebrow Above Springline 24
Section Details: Wood Direct Glaze Round Top 26
Section Details: Wood Direct Glaze Round Top Mullion Options 27
Wood Direct Glaze Round Top Shape Reference 29
Single Glaze Divided Lite Options 30
Standard Insulating Glass Divided Lite Options 31
Optional Interior Square Simulated Divided Lite 32

Unit Features: Wood Direct Glaze Polygon

Wood Direct Glaze Polygon: WDGP

Frame

- Frame width: 4 9/16" (116)
- Frame thickness: 1 3/32” (28)
- Minimum frame angle 12°
- Subsill thickness: 15/16" (24)

Glass and Glazing:

- Glazing seal:
  - Glazed from the interior
  - Exterior of the glass is sealed to the frame with glazing sealant
  - Interior of the glass is sealed to the interior glazing bead with glazing tape
- Standard glass: insulating Low E2 Argon or air
  - Optional glazing available: Low E1 Argon or air, Low E3 Argon or air, clear, tints, tempered, and obscure
  - Optional tripane glazing available: Low E2/E1, E3/E1, E1/E1 air, Argon, Krypton-Argon, or Krypton fill
- Insulating glass will be altitude adjusted with capillary tubes for higher elevations
- Argon gas is not available for elevations that require capillary tubes

CE Glass and Glazing:

- Glazing seal: silicone glazed
- Standard glass: Insulating Low E2 Argon or air
  - Optional glazing available: Low E1 Argon or air, Low E3 Argon or air, clear, laminated clear & tints, tempered, sandblasted
  - Optional tripane glazing available: Low E2/E1, E3/E1, E1/E1 air, Argon, Krypton-Argon, or Krypton fill
- Glass panes available in 3, 4, and 6 mm thicknesses
- Laminated panes available in 7.0 and 7.8 mm thicknesses
- Insulating glass will be altitude adjusted with capillary tubes for higher elevations
- Argon gas is not available for elevations that require capillary tubes

Glazing for Impact Units:

- Glazing seal:
  - The glass is set from the interior against a bead of silicone
  - The perimeter of the glass is backfilled with silicone
  - The interior wood bead is secured to the frame with 1 3/8" (35) brad nails nominal 5" on center
- Impact glass setting blocks are used to reduce the chance of glass sliding.

Interior Shades:

- Cellular shade is attached to the window with a removable surround system that houses the cellular shade system
  - Shade cartridge is removable and replaceable
  - One shade per sash opening
  - Shade control: top down, bottom up
- Wood surround frame
  - Species: Pine, Mahogany, or Vertical Grain Douglas Fir
  - Roll formed screen: Satin Taupe (standard), White or Bronze (optional)
- Cellular shade
  - Single non-fire rated hexagonal honeycomb (cellular) 3/4" (19)
  - Semi-opaque fabric (light filtering)
    - Colors: Driftwood, Marigold, Almond, Rose, Denim, Biscuit, Champagne, Moss, Cinnamon, Silver, White, Stone, Tan, Ivory, or Eggshell
  - Opaque fabric (blackout)
    - Colors: White, Stone, Tan, Ivory, or Eggshell
- Order options:
  - Ship separate: shade system packages separate and ships same time as the unit

Unit Features: Wood Direct Glaze Polygon

- Ship later: shade system ships at a later date chosen by the customer
  - Shade option must be chosen at the time of unit order
  - Fabric opacity and color can be chosen at later date
- Retro fit: ordered as a complete shade system through configured parts

Mulling Options:

- Factory mulling is available
- Maximum mulled assembly: Masonry Opening 144" x 103"
- Mulling options: direct mull, 3/8" mull reinforcement, 1" LVL structural mull, space mull, stud pocket

CE Mulling Options:

- Mulled assemblies up to 64" (1626) x 71 1/8" (1807) as a 1H x multi-width
- Mulled assemblies with 1" (25) LVL or 3/8" (10) aluminum mull reinforcement up to 122" (3099) x 104 1/4" (2648) as a multi-wide or multi-high assembly

Min/Max Guidelines and Certified Sizes: Standard Wood Direct Glaze Polygon

Minimum Guidelines - Direct Glaze Polygon							
Unit Type		Frame Size				Minimum Short leg	
		Min Width		Min Height			
		in	mm	in	mm	in	mm
Single Glaze	P3	6 31/32	(177)	6 31/32	(177)	6 31/32	(177)
	P4	6 9/16	(167)	7 1/2	(191)	6 9/16	(167)
	P5	6 9/16	(167)	7 1/2	(191)	6	(152)
	P6	10 13/32	(264)	10 13/32	(264)	6	(152)
	P8	14 1/2	(368)	14 1/2	(368)	6	(152)
	Rect	6 9/16	(167)	7 1/2	(191)	6 9/16	(167)
Insulating Glass	P3	6 31/32	(177)	6 31/32	(177)	6 31/32	(177)
	P4	6 9/16	(167)	7 1/2	(191)	6 9/16	(167)
	P5	6 9/16	(167)	7 1/2	(191)	6	(152)
	P6	10 13/32	(264)	10 13/32	(264)	6	(152)
	P8	14 1/2	(368)	14 1/2	(368)	6	(152)
	Rect	6 9/16	(167)	7 1/2	(191)	6 9/16	(167)

Maximum Guidelines - Direct Glaze Polygon									
Unit Type		Non-Certified Frame Size				Certified Frame Size			
		Max Width		Max Height		Max Width		Max Height	
		in	mm	in	mm	in	mm	in	mm
Single Glaze	All Shapes	145 9/16	(3697)	54 13/16	(1392)	84	(2134)	87	(2210)
		90 1/2	(2299)	87	(2210)	97 15/16	(2488)	74	(1880)
		86 1/16	(2186)	91 7/16	(2323)	87	(2210)	84	(2134)
		53 7/8	(1368)	146 1/2	(3721)	74	(1880)	97 15/16	(2488)
Insulting Glass	All Shapes	145 9/16	(3697)	64 7/8	(1648)	84	(2134)	97 15/16	(2488)
		107 3/4	(2737)	87	(2210)	97 15/16	(2488)	84	(2134)
		86 1/16	(2186)	108 11/16	(2761)				
		63 15/16	(1624)	146 1/2	(3721)				
CE Product	All Shapes					84	(2134)	96	(2438)
						96	(2438)	84	(2134)

NOTE: Single glaze is not available with CE mark

Minimum and Maximum Guidelines: Impact Wood Direct Glaze Polygon

Minimum Guidelines - Direct Glaze Polygon							
Unit Type		Frame Size				Minimum Short leg	
		Min Width		Min Height			
		in	mm	in	mm	in	mm
IZ3 Impact Product	P3	6 31/32	(177)	6 31/32	(177)	6 31/32	(177)
	P4	6 9/16	(167)	7 1/2	(191)	6 9/16	(167)
	P5	6 9/16	(167)	7 1/2	(191)	6	(152)
	P6	10 13/32	(264)	10 13/32	(264)	6	(152)
	P8	14 1/2	(368)	14 1/2	(368)	6	(152)
	Rect	6 9/16	(167)	7 1/2	(191)	6 9/16	(167)

Maximum Guidelines - Direct Glaze Polygon					
Unit Type		Certified Frame Size			
		Max Width		Max Height	
		in	mm	in	mm
IZ3 Impact	All Shapes	73	(1854)	73 15/16	(1878)

NOTE: CE mark is not available on Impact units

Minimum and Maximum Guidelines: Interior Shades

Minimum and Maximum - Direct Glaze Polygon Interior Shade Option								
Unit Type	Minimum Frame Size				Maximum Frame Size			
	Width		Height		Width		Height	
	in	mm	in	mm	in	mm	in	mm
Rectangular Direct Glaze	12	(305)	11 1/8	(283)	72	(1829)	113 3/8	(2880)

Certified Sizes and Ratings: Standard Units and Impact

Standard Product	Air Tested to psf	Water Tested to psf	Structural Tested to psf	Certification Rating	Design Pressure (DP)	Max Overall		Max Overall	
						in	mm	in	mm
Wood Direct Glaze Polygon and Round Top	1.57	8.25	75	CW-PG50-FW	50	84	(2134)	97 15/16	(2488)

Impact Product	Air Tested to psf	Water Tested to psf	Structural Tested to psf	Certification Rating	Design Pressure (DP)	Max Overall		Max Overall	
						in	mm	in	mm
Wood Direct Glaze Polygon and Round Top	1.57	8.25	82.5	CW-PG55-FW	+55/-65	73	(1854)	73 15/16	(1878)

NOTE: For CE ratings, please visit www.marvin.com/ce_technical_manual

Measurement Conversions: Wood Direct Glaze Polygon

Direct Glaze - IG & SG					
Unit Measurements		**Width**		**Height**	
From	**To**				
Rough Opening		**in**	**mm**	**in**	**mm**
OM of Frame	Rough Opening	+ 1	(25)	+ 1/2	(13)
Masonry Opening w/BMC	Rough Opening	-2 1/2	(64)	-1 1/4	(32)
Frame		**in**	**mm**	**in**	**mm**
Daylight Opening	OM of Frame	+ 3 15/16	(100)	+ 3 15/16	(100)
Glass		**in**	**mm**	**in**	**mm**
Daylight Opening	Glass	+ 1 3/8	(35)	+ 1 3/8	(35)
Energy Panel - available on SG only		**in**	**mm**	**in**	**mm**
Rough Opening	OM of Glass	+ 3 5/16	(84)	+ 2 13/16	(71)
Interior Shade		**in**	**mm**	**in**	**mm**
OM of Frame (manufactured 5/4 frame)	Shade Surround	-2 9/32	(58)	-2 9/32	(58)
OM of Frame (manufactured 4/4 frame)	Shade Surround	-1 15/32	(37)	-1 15/32	(37)

NOTE: Minimum angle on any shape wood unit is 12 degrees.
Conversions do not include subsill

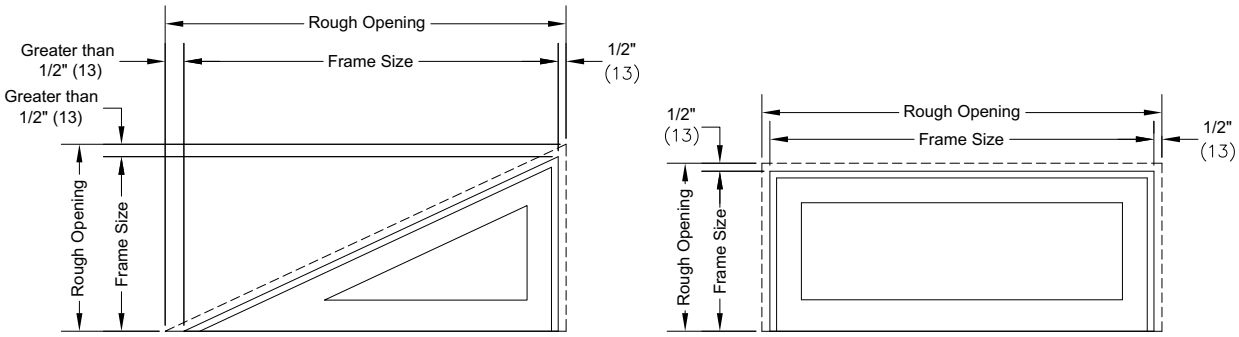

NOTE: 1/2" (13) Rough Opening tolerance is maintained perpendicular to the frame of polygon units.
1/4" (6) Masonry Opening tolerance is maintained perpendicular to the frame or casing of polygon units.
Measurement tolerances vary due to polygon angles. Specify either Frame Size or Rough Opening measurement, Marvin will calculate the appropriate tolerances.
Elevations above are shown without casing.

Slope To Angle and Angle to Pitch Conversion - Wood Direct Glaze Polygon

Slope to Angle / Degree Conversions					
Slope	Angle	Degree / Minutes	Slope	Angle	Degree / Minutes
1/12	4.76	4 degree 46'	13/12	47.29	47 degree 14'
2/12	9.46	9 degree 28'	14/12	49.40	49 degree 24'
3/12	14.04	14 degree 2'	15/12	51.34	51 degree 20'
4/12	18.43	18 degree 26'	16/12	53.13	53 degree 8'
5/12	22.62	22 degree 37'	17/12	54.78	54 degree 47'
6/12	26.57	26 degree 34'	18/12	56.31	56 degree 19'
7/12	30.26	30 degree 15'	19/12	57.72	57 degree 43'
8/12	33.69	33 degree 41'	20/12	59.04	59 degree 2'
9/12	36.87	36 degree 52'	21/12	60.26	60 degree 15'
10/12	39.81	39 degree 48'	22/12	61.39	61 degree 23'
11/12	42.51	42 degree 31'	23/12	62.45	62 degree 27'
12/12	45.00	45 degree 0'	24/12	63.43	63 degree 26'

Angle to Pitch conversions							
Angle	Pitch	Angle	Pitch	Angle	Pitch	Angle	Pitch
1	0.21/12	26	5.85/12	51	14.82/12	76	48.13/12
2	0.42/12	27	6.11/12	52	15.36/12	77	51.98/12
3	0.63/12	28	6.38/12	53	15.92/12	78	56.46/12
4	0.84/12	29	6.65/12	54	16.52/12	79	61.73/12
5	1.05/12	30	6.93/12	55	17.14/12	80	68.06/12
6	1.26/12	31	7.21/12	56	17.79/12	81	75.77/12
7	1.47/12	32	7.50/12	57	18.48/12	82	85.38/12
8	1.69/12	33	7.79/12	58	19.20/12	83	97.73/12
9	1.90/12	34	8.09/12	59	19.97/12	84	114.17/12
10	2.12/12	35	8.40/12	60	20.78/12	85	137.16/12
11	2.33/12	36	8.72/12	61	21.65/12	86	171.61/12
12	2.55/12	37	9.04/12	62	22.57/12	87	228.97/12
13	2.77/12	38	9.38/12	63	23.55/12	88	343.64/12
14	2.99/12	39	9.72/12	64	24.60/12	89	687.48/12
15	3.22/12	40	10.07/12	65	25.73/12		
16	3.44/12	41	10.43/12	66	26.95/12		
17	3.67/12	42	10.80/12	67	28.27/12		
18	3.90/12	43	11.19/12	68	29.70/12		
19	4.13/12	44	11.59/12	69	31.26/12		
20	4.37/12	45	12.00/12	70	32.97/12		
21	4.61/12	46	12.43/12	71	34.85/12		
22	4.85/12	47	12.87/12	72	36.93/12		
23	5.09/12	48	13.33/12	73	39.25/12		
24	5.34/12	49	13.80/12	74	41.85/12		
25	5.60/12	50	14.30/12	75	44.78/12		

Section Details: Wood Direct Glaze Polygon

Scale: 3' = 1' 0"

Insulating Glass

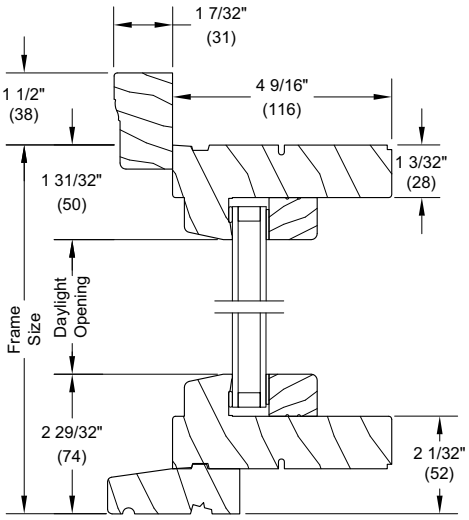

Head Jamb and Sill

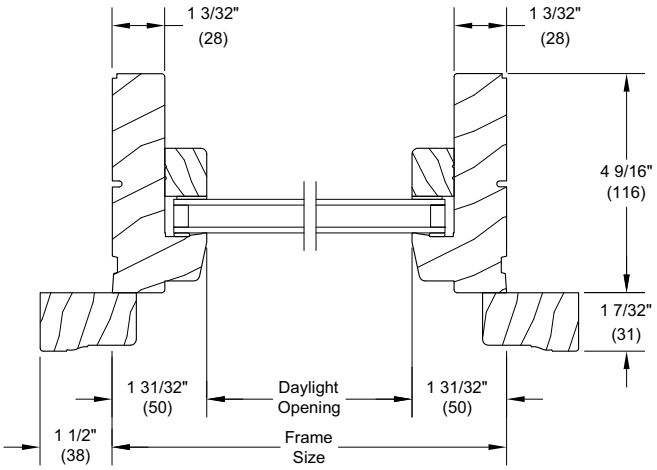

Jambs

Single Glaze

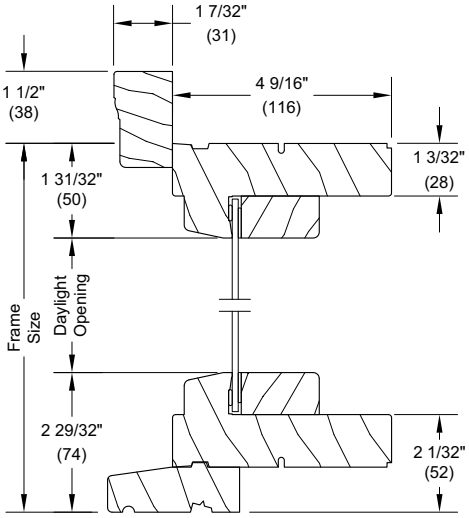

Head Jamb and Sill

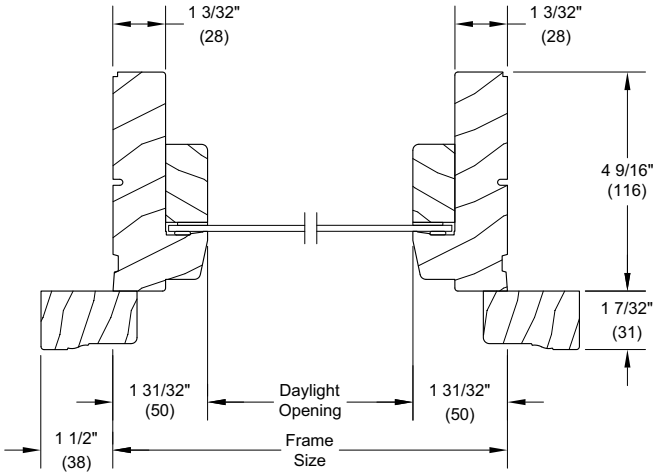

Jambs

NOTE: Single glaze is not available with CE mark

Section Details: Wood Direct Glaze Polygon - IZ3

Scale: 3' = 1' 0"

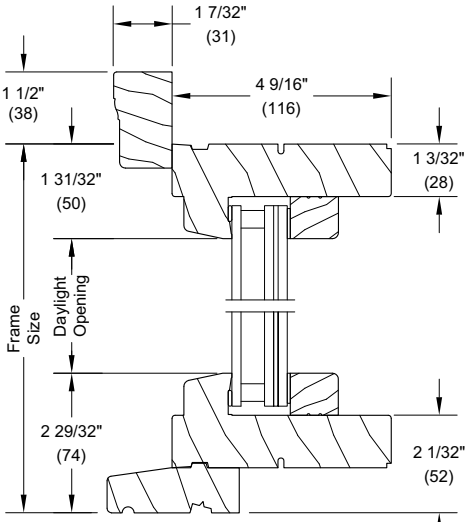

Head Jamb and Sill

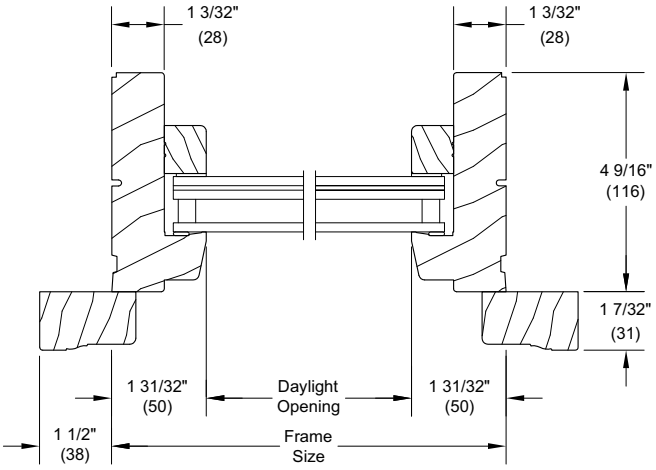

Jambs

NOTE: CE mark is not available on Impact units

Section Details: Interior Shade Option

Scale: 3' = 1' 0"

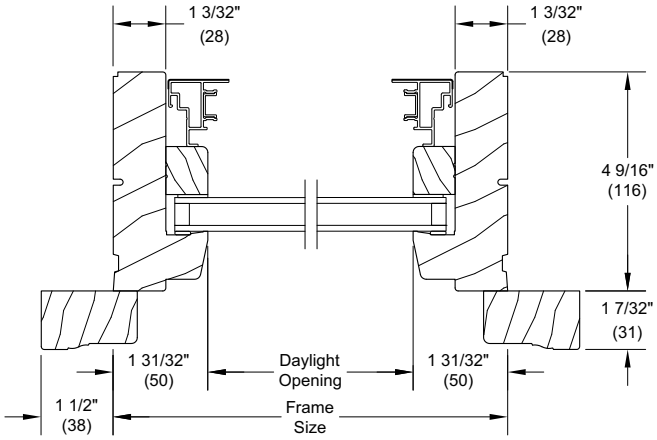

Jambs

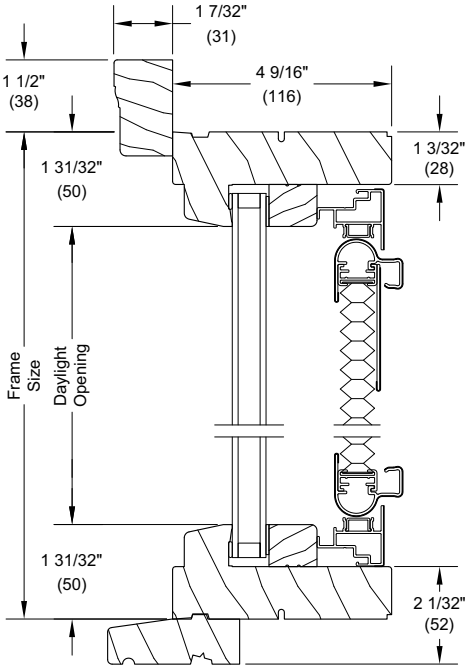

Head Jamb and Sill
Shades Closed

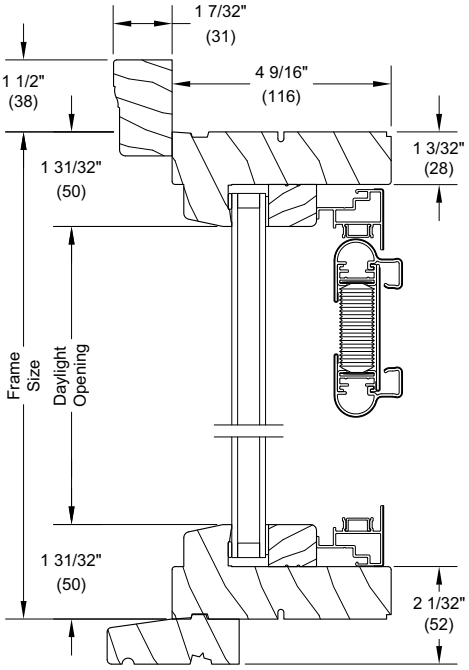

Head Jamb and Sill
Shades Open

Section Details: Wood Direct Glaze Polygon Mullion Options

Scale: 3' = 1' 0"

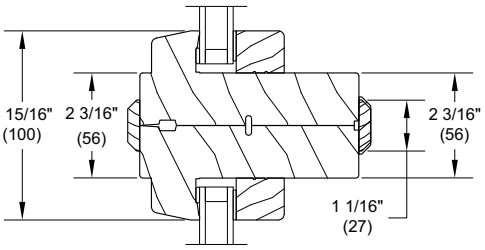

Horizontal Mullion

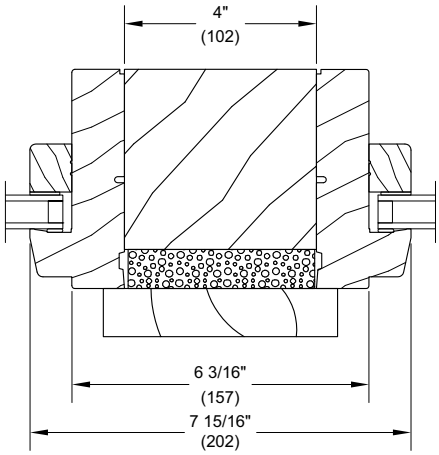

4" Solid Wood Blocking
Vertical Space Mull

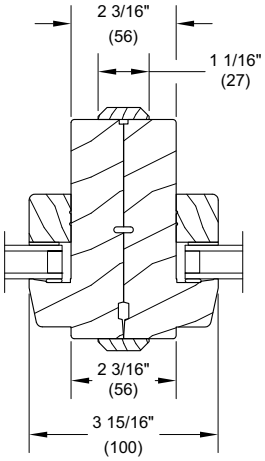

Vertical Mullion

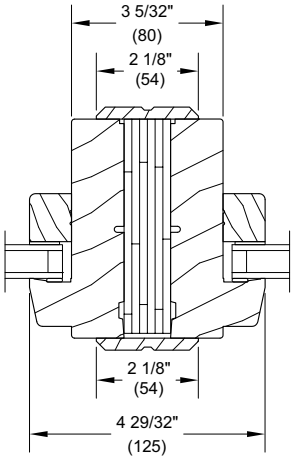

1" LVL
Vertical Mullion

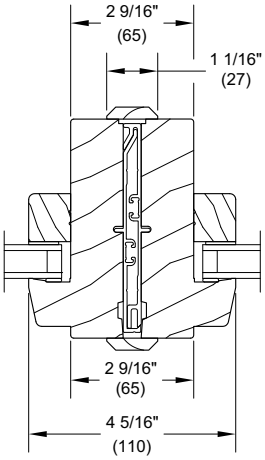

3/8" Mull Reinforcement
Vertical Mullion

Polygon Shape Reference

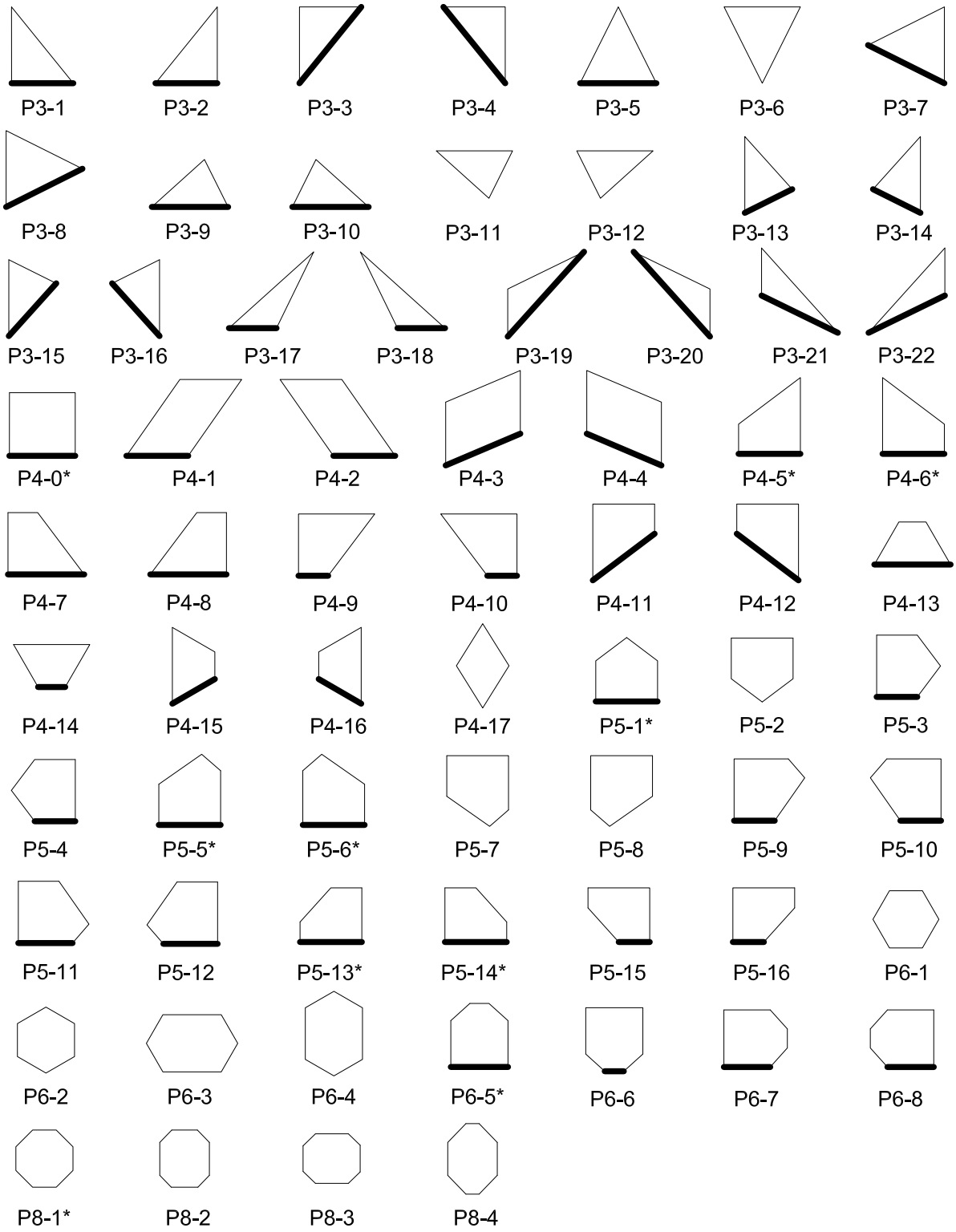

NOTE: Please contact your Marvin representative for availability and more information.
Dark line indicates subsill placement.

Unit Features: Wood Direct Glaze Round Top

Wood Direct Glaze Round Top: WDGRT

Frame:

- Frame thickness: 11/16" (17).
- Frame width: 4 9/16" (116).
- Subsill thickness: 15/16" (24).
- Constructed of laminated wood with a clear, bare veneer to the interior of the radius portion, and non finger-jointed, finger-joint, and edge-glue wood on the straight components.

Glass and Glazing:

- Glazing seal:
  - Glazed from the interior
  - Exterior of the glass is sealed to the frame with glazing sealant
  - The interior of the glass is sealed to the interior glazing bead with glazing tape
- Standard glass: Insulating Low E2 Argon or air
  - Optional glazing available: Low E1 Argon or air, Low E3 Argon or air, clear, tints, tempered, and obscure
  - Optional tripane glazing available: Low E2/E1, E3/E1, E1/E1 air, Argon, Krypton-Argon, or Krypton fill
- Insulating glass will be altitude adjusted with capillary tubes for higher elevations. Argon gas is not available for elevations that require capillary tubes.

CE Glass and Glazing:

- Glazing seal: silicone glazed
- Standard glass: Insulating Low E2 Argon or air
  - Optional glazing available: Low E1 Argon or air, Low E3 Argon or air, clear, laminated clear & tints, tempered, sandblasted
  - Optional tripane glazing available: Low E2/E1, E3/E1, E1/E1 air, Argon, Krypton-Argon, or Krypton fill
- Glass panes available in 3, 4, and 6 mm thicknesses
- Laminated panes available in 7.0 and 7.8 mm thicknesses
- Insulating glass will be altitude adjusted with capillary tubes for higher elevations
- Argon gas is not available for elevations that require capillary tubes

Glazing for Impact Units:

- Glazing seal:
  - Glazed from the interior against a bead of silicone
  - The perimeter of the glass is backfilled with silicone
  - The interior wood bead is secured to the frame with 1 3/8" (35) brad nails nominal 5" on center
  - Impact glass setting blocks are used to reduce the chance of glass sliding

Mulling Options:

- Factory mulling is available
- Maximum mulled assembly: Masonry Opening 144" x 103"
- Mulling options: direct mull, 3/8" mull reinforcement, 1" LVL structural mull, space mull, stud pocket

CE Mulling Options:

- Mulled assemblies up to 64" (1626) x 71 1/8" (1807) as a 1H x multi-width
- Mulled assemblies with 1" (25) LVL or 3/8" (10) aluminum mull reinforcement up to 122" (3099) x 104 1/4" (2648) as a multi-wide or multi-high assembly

Min/Max Guidelines: Wood Direct Glaze Round Top

Minimum Guidelines - Direct Glaze Round Tops				
Round Top Shape	Frame Size			
	Min Width		Min Height	
	in	mm	in	mm
True Half RT1	17	(432)	8 1/2	(216)
Eyebrow above Springline RT6	9	(229)	9 1/2	(241)
Quarter Round RT7 or RT8	8 1/2	(216)	8 1/2	(216)
Full Circle RT27	21 1/2	(546)	21 1/2	(546)
Full Ellipse RT28	23	(584)	35 1/2	(902)

Maximum Guidelines - Direct Glaze Round Tops									
Unit Type		Non-Certified Frame Size				Certified Frame Size			
		Max Width		Max Height		Max Width		Max Height	
		in	mm	in	mm	in	mm	in	mm
Single Glaze	All Shapes	144 3/4	(3677)	54	(1372)	84	(2134)	87	(2210)
		89 11/16	(2278)	86 3/16	(2189)	74	(1880)	97 15/16	(2488)
		85 1/4	(2165)	90 5/8	(2302)	87	(2210)	84	(2134)
		53 1/16	(1348)	145 11/16	(3700)	97 15/16	(2488)	74	(1880)
Insulating Glass	All Shapes	144 3/4	(3677)	64 1/16	(1627)	84	(2134)	97 15/16	(2488)
		106 15/16	(2716)	86 3/16	(2189)	97 15/16	(2488)	84	(2134)
		85 1/4	(2165)	107 7/8	(2740)				
		63 1/8	(1603)	145 11/16	(3700)				
CE Product	All Shapes					84	(2134)	96	(2438)
						96	(2438)	84	(2134)

NOTE: Single glaze is not available with CE mark

Minimum and Maximum Guidelines: Impact Wood Direct Glaze Round Tops

Maximum Guidelines - Direct Glaze Round Tops					
Unit Type		Certified Frame Size			
		Max Width		Max Height	
		in	mm	in	mm
IZ3 Impact Product	All Shapes	73	(1854)	73 15/16	(1878)

NOTE: IZ3 Impact products are not available with CE mark

Certified Sizes: Wood Direct Glaze Round Top

Standard Product	Air Tested to psf	Water Tested to psf	Structural Tested to psf	Certification Rating	Design Pressure (DP)	Max Overall		Max Overall	
						in	mm	in	mm
Wood Direct Glaze Polygon and Round Top	1.57	8.25	75	CW-PG50-FW	50	84	(2134)	97 15/16	(2488)

Impact Product	Air Tested to psf	Water Tested to psf	Structural Tested to psf	Certification Rating	Design Pressure (DP)	Max Overall		Max Overall	
						in	mm	in	mm
Wood Direct Glaze Polygon and Round Top	1.57	8.25	82.5	CW-PG55-FW	+55/-65	73	(1854)	73 15/16	(1878)

NOTE: For CE ratings, please visit www.marvin.com/ce_technical_manual

Measurement Conversions: Wood Direct Glaze Round Top

Unit Measurements		Width		Height	
From	**To**				
Rough Opening		**in**	**mm**	**in**	**mm**
OM of Frame	Rough Opening	+ 1	(25)	+ 1/2	(13)
Masonry Opening w/BMC	Rough Opening	-2 1/2	(64)	-1 1/4	(32)
WUCA CN Direct Glaze Masonry Opening w/BMC	Rough Opening	-2 5/8	(67)	-1 5/16	(33)
WUDH CN Direct Glaze Masonry Opening w/BMC	Rough Opening	-2 1/8	(54)	-1 1/4	(32)
Frame		**in**	**mm**	**in**	**mm**
Daylight Opening	Frame Size	+ 3 1/8	(79)	+ 3 1/8	(79)
Glass		**in**	**mm**	**in**	**mm**
Daylight Opening	Glass	+ 1 3/8	(35)	+ 1 3/8	(35)

NOTE: Conversions do not include subsill

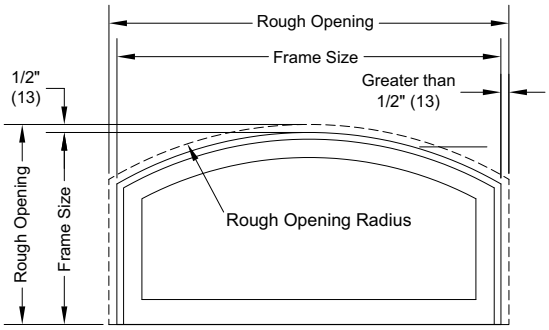

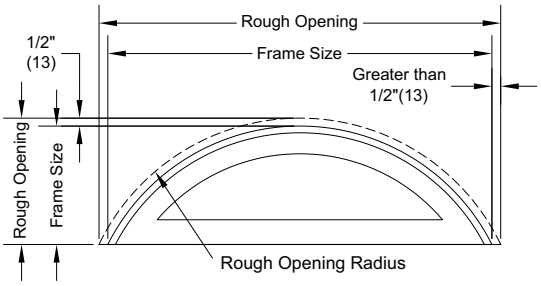

NOTE: On all units, we maintain our clearance or conversion dimension perpendicular to the frame. For this reason, standard rectangular conversions cannot be used for any unit involving a radius or angles. These must be calculated on an individual basis. If any dimension is critical (such as frame OSM to match lower unit) then the order should be placed with that dimension. The order will be converted to the accurate rough openings.

Standard Sizes: Wood Ultimate Casement - Full Circle and Ellipse Series

Wood Ultimate Casement/Awning Direct Glaze Round Tops									
Shape - RT27 - Full Circle									
CN		**Width**				**Height**			
		Masonry Opening		**Rough Opening**		**Masonry Opening**		**Rough Opening**	
		ft-in	**mm**	**ft-in**	**mm**	**ft-in**	**mm**	**ft-in**	**mm**
RT	**2750**	2-4	(711)	2-1 1/2	(648)	2-4	(711)	2-1 1/2	(648)
RT	**3950**	3-4	(1016)	3-1 1/2	(953)	3-4	(1016)	3-1 1/2	(953)
RT	**5150**	4-4	(1321)	4-1 1/2	(1257)	4-4	(1321)	4-1 1/2	(1257)
Shape - RT28 - Full Elliptical									
RT	**2436**	2-3 1/2	(699)	2-1	(635)	3-3 1/2	(1003)	3-1	(940)
RT	**3248**	2-11 1/2	(902)	2-9	(838)	4-3 1/2	(1308)	4-1	(1245)
RT	**4060**	3-7 1/2	(1105)	3-5	(1041)	5-3 1/2	(1613)	5-1	(1549)

Standard Sizes: Wood Ultimate Casement - True Half, Elliptical and Quarter Circle

Wood Ultimate Casement/Awning Direct Glaze Round Tops									
Shape - RT1 - True Half Circle									
CN		**Width**				**Height**			
		Masonry Opening		**Rough Opening**		**Masonry Opening**		**Rough Opening**	
		ft-in	**mm**	**ft-in**	**mm**	**ft-in**	**mm**	**ft-in**	**mm**
RT	**2010**	1-11 5/8	(600)	1-9	(533)	0-11 13/16	(300)	0-10 1/2	(267)
RT	**2412**	2-3 5/8	(702)	2-1	(635)	1-1 13/16	(351)	1-0 1/2	(318)
RT	**2814**	2-7 5/8	(803)	2-5	(737)	1-3 13/16	(402)	1-2 1/2	(368)
RT	**3216**	2-11 5/8	(905)	2-9	(838)	1-5 13/16	(452)	1-4 1/2	(419)
RT	**3618**	3-3 5/8	(1006)	3-1	(940)	1-7 13/16	(503)	1-6 1/2	(470)
RT	**4020**	3-7 5/8	(1108)	3-5	(1041)	1-9 13/16	(554)	1-8 1/2	(521)
RT	**4824**	4-3 5/8	(1311)	4-1	(1245)	2-1 13/16	(656)	2-0 1/2	(622)
RT	**5628**	4-11 5/8	(1514)	4-9	(1448)	2-5 13/16	(757)	2-4 1/2	(724)
RT	**6026**	5-3 5/8	(1616)	5-1	(1549)	2-7 13/16	(808)	2-6 1/2	(775)
RT	**6432**	5-7 5/8	(1718)	5-5	(1651)	2-9 13/16	(859)	2-8 1/2	(826)
RT	**7236**	6-3 5/8	(1921)	6-1	(1854)	3-1 13/16	(960)	3-0 1/2	(927)
RT	**8442**	7-3 5/8	(2226)	7-1	(2159)	3-7 13/16	(1113)	3-6 1/2	(1080)
RT	**9648**	8-3 5/8	(2530)	8-1	(2464)	4-1 13/16	(1265)	4-0 1/2	(1232)
Shape - RT29 - Elliptical									
RT	**4017**	3-7 5/8	(1108)	3-5	(1041)	1-7 1/4	(489)	1-5 15/16	(456)
RT	**4817**	4-3 5/8	(1311)	4-1	(1245)	1-7 1/4	(489)	1-5 15/16	(456)
RT	**5617**	4-11 5/8	(1514)	4-9	(1448)	1-7 1/4	(489)	1-5 15/16	(456)
RT	**7217**	6-3 5/8	(1921)	6-1	(1854)	1-7 1/4	(489)	1-5 15/16	(456)
RT	**8417**	7-3 5/8	(2226)	7-1	(2159)	1-7 1/4	(489)	1-5 15/16	(456)
Shape - RT15,16 - Quarter Circle									
RT	**2020**	1-11 5/8	(600)	1-9	(533)	1-8 15/16	(532)	1-7 5/8	(498)
RT	**2424**	2-3 5/8	(702)	2-1	(635)	2-0 15/16	(633)	1-11 5/8	(600)
RT	**2828**	2-7 5/8	(803)	2-5	(737)	2-4 15/16	(735)	2-3 5/8	(702)
RT	**3232**	2-11 5/8	(905)	2-9	(838)	2-8 15/16	(837)	2-7 5/8	(803)
RT	**3636**	3-3 5/8	(1006)	3-1	(940)	3-0 15/16	(938)	2-11 5/8	(905)
RT	**4040**	3-7 5/8	(1108)	3-5	(1041)	3-4 15/16	(1040)	3-3 5/8	(1006)
RT	**4848**	4-3 5/8	(1311)	4-1	(1245)	4-0 15/16	(1243)	3-11 5/8	(1210)

Standard Sizes: Clad Ultimate Casement - Eyebrow above Springline

Wood Ultimate Casement/Awning Direct Glaze Round Tops Shape - RT6 - Eyebrow Above Springline																	
CN		Width								Height							
		Masonry Opening		Masonry Opening Radius		Rough Opening		Rough Opening Radius		Masonry Opening		Masonry Opening Springline		Rough Opening		Rough Opening Springline	
		ft-in	mm	ft-in	mm	ft-in	mm	ft-in	mm	ft-in	mm	ft-in	mm	ft-in	mm	ft-in	mm
RT	**2411**	2-3 5/8	(702)	2-1 13/16	(656)	2-1	(635)	2-0 1/2	(622)	1-1 13/16	(351)	0-9 13/16	(249)	1-0 1/2	(318)	0-9 1/16	(230)
RT	**2419**	2-3 5/8	(702)	2-1 13/16	(656)	2-1	(635)	2-0 1/2	(622)	1-7 13/16	(503)	1-3 13/16	(401)	1-6 1/2	(470)	1-3 1/16	(383)
RT	**2423**	2-3 5/8	(702)	2-1 13/16	(656)	2-1	(635)	2-0 1/2	(622)	2-1 13/16	(656)	1-9 13/16	(554)	2-0 1/2	(622)	1-9 1/16	(535)
RT	**2435**	2-3 5/8	(702)	2-1 13/16	(656)	2-1	(635)	2-0 1/2	(622)	3-1 13/16	(960)	2-9 13/16	(859)	3-0 1/2	(927)	2-9 1/16	(840)
RT	**2447**	2-3 5/8	(702)	2-1 13/16	(656)	2-1	(635)	2-0 1/2	(622)	4-1 13/16	(1265)	3-9 13/16	(1163)	4-0 1/2	(1232)	3-9 1/16	(1145)
RT	**2459**	2-3 5/8	(702)	2-1 13/16	(656)	2-1	(635)	2-0 1/2	(622)	5-1 13/16	(1570)	4-9 13/16	(1468)	5-0 1/2	(1537)	4-9 1/16	(1450)
RT	**2471**	2-3 5/8	(702)	2-1 13/16	(656)	2-1	(635)	2-0 1/2	(622)	6-1 13/16	(1875)	5-9 13/16	(1773)	6-0 1/2	(1842)	5-9 1/16	(1754)
RT	**2811**	2-7 5/8	(803)	2-1 13/16	(656)	2-5	(737)	2-0 1/2	(622)	1-1 13/16	(351)	0-8 13/32	(213)	1-0 1/2	(318)	0-7 3/4	(197)
RT	**2819**	2-7 5/8	(803)	2-1 13/16	(656)	2-5	(737)	2-0 1/2	(622)	1-7 13/16	(503)	1-2 13/32	(366)	1-6 1/2	(470)	1-1 3/4	(349)
RT	**2823**	2-7 5/8	(803)	2-1 13/16	(656)	2-5	(737)	2-0 1/2	(622)	2-1 13/16	(656)	1-8 13/32	(518)	2-0 1/2	(622)	1-7 3/4	(502)
RT	**2835**	2-7 5/8	(803)	2-1 13/16	(656)	2-5	(737)	2-0 1/2	(622)	3-1 13/16	(960)	2-8 13/32	(823)	3-0 1/2	(927)	2-7 3/4	(806)
RT	**2847**	2-7 5/8	(803)	2-1 13/16	(656)	2-5	(737)	2-0 1/2	(622)	4-1 13/16	(1265)	3-8 13/32	(1128)	4-0 1/2	(1232)	3-7 3/4	(1111)
RT	**2859**	2-7 5/8	(803)	2-1 13/16	(656)	2-5	(737)	2-0 1/2	(622)	5-1 13/16	(1570)	4-8 13/32	(1433)	5-0 1/2	(1537)	4-7 3/4	(1416)
RT	**2871**	2-7 5/8	(803)	2-1 13/16	(656)	2-5	(737)	2-0 1/2	(622)	6-1 13/16	(1875)	5-8 13/32	(1737)	6-0 1/2	(1842)	5-7 3/4	(1721)
RT	**3211**	2-11 5/8	(905)	2-7 13/16	(808)	2-9	(838)	2-6 1/2	(775)	1-1 13/16	(351)	0-8 11/32	(212)	1-0 1/2	(318)	0-7 21/32	(194)
RT	**3219**	2-11 5/8	(905)	2-7 13/16	(808)	2-9	(838)	2-6 1/2	(775)	1-7 13/16	(503)	1-2 11/32	(365)	1-6 1/2	(470)	1-1 21/32	(347)
RT	**3223**	2-11 5/8	(905)	2-7 13/16	(808)	2-9	(838)	2-6 1/2	(775)	2-1 13/16	(656)	1-8 11/32	(517)	2-0 1/2	(622)	1-7 21/32	(499)
RT	**3235**	2-11 5/8	(905)	2-7 13/16	(808)	2-9	(838)	2-6 1/2	(775)	3-1 13/16	(960)	2-8 11/32	(822)	3-0 1/2	(927)	2-7 21/32	(804)
RT	**3247**	2-11 5/8	(905)	2-7 13/16	(808)	2-9	(838)	2-6 1/2	(775)	4-1 13/16	(1265)	3-8 11/32	(1127)	4-0 1/2	(1232)	3-7 21/32	(1109)
RT	**3259**	2-11 5/8	(905)	2-7 13/16	(808)	2-9	(838)	2-6 1/2	(775)	5-1 13/16	(1570)	4-8 11/32	(1431)	5-0 1/2	(1537)	4-7 21/32	(1414)
RT	**3271**	2-11 5/8	(905)	2-7 13/16	(808)	2-9	(838)	2-6 1/2	(775)	6-1 13/16	(1875)	5-8 11/32	(1736)	6-0 1/2	(1842)	5-7 21/32	(1718)
RT	**3611**	3-3 5/8	(1006)	2-7 13/16	(808)	3-1	(940)	2-6 1/2	(775)	1-1 13/16	(351)	0-6 7/8	(175)	1-0 1/2	(318)	0-6 1/4	(159)
RT	**3619**	3-3 5/8	(1006)	2-7 13/16	(808)	3-1	(940)	2-6 1/2	(775)	1-7 13/16	(503)	1-0 7/8	(327)	1-6 1/2	(470)	1-0 1/4	(311)
RT	**3623**	3-3 5/8	(1006)	2-7 13/16	(808)	3-1	(940)	2-6 1/2	(775)	2-1 13/16	(656)	1-6 7/8	(480)	2-0 1/2	(622)	1-6 1/4	(464)
RT	**3635**	3-3 5/8	(1006)	2-7 13/16	(808)	3-1	(940)	2-6 1/2	(775)	3-1 13/16	(960)	2-6 7/8	(785)	3-0 1/2	(927)	2-6 1/4	(768)
RT	**3647**	3-3 5/8	(1006)	2-7 13/16	(808)	3-1	(940)	2-6 1/2	(775)	4-1 13/16	(1265)	3-6 7/8	(1089)	4-0 1/2	(1232)	3-6 1/4	(1073)
RT	**3659**	3-3 5/8	(1006)	2-7 13/16	(808)	3-1	(940)	2-6 1/2	(775)	5-1 13/16	(1570)	4-6 7/8	(1394)	5-0 1/2	(1537)	4-6 1/4	(1378)
RT	**3671**	3-3 5/8	(1006)	2-7 13/16	(808)	3-1	(940)	2-6 1/2	(775)	6-1 13/16	(1875)	5-6 7/8	(1699)	6-0 1/2	(1842)	5-6 1/4	(1683)
RT	**4011**	3-7 5/8	(1108)	3-5 13/16	(1062)	3-5	(1041)	3-4 1/2	(1029)	1-1 13/16	(351)	0-7 11/16	(195)	1-0 1/2	(318)	0-6 15/16	(176)
RT	**4019**	3-7 5/8	(1108)	3-5 13/16	(1062)	3-5	(1041)	3-4 1/2	(1029)	1-7 13/16	(503)	1-1 11/16	(347)	1-6 1/2	(470)	1-0 15/16	(328)
RT	**4023**	3-7 5/8	(1108)	3-5 13/16	(1062)	3-5	(1041)	3-4 1/2	(1029)	2-1 13/16	(656)	1-7 11/16	(500)	2-0 1/2	(622)	1-6 15/16	(481)
RT	**4035**	3-7 5/8	(1108)	3-5 13/16	(1062)	3-5	(1041)	3-4 1/2	(1029)	3-1 13/16	(960)	2-7 11/16	(804)	3-0 1/2	(927)	2-6 15/16	(786)
RT	**4047**	3-7 5/8	(1108)	3-5 13/16	(1062)	3-5	(1041)	3-4 1/2	(1029)	4-1 13/16	(1265)	3-7 11/16	(1109)	4-0 1/2	(1232)	3-6 15/16	(1090)
RT	**4059**	3-7 5/8	(1108)	3-5 13/16	(1062)	3-5	(1041)	3-4 1/2	(1029)	5-1 13/16	(1570)	4-7 11/16	(1414)	5-0 1/2	(1537)	4-6 15/16	(1395)
RT	**4071**	3-7 5/8	(1108)	3-5 13/16	(1062)	3-5	(1041)	3-4 1/2	(1029)	6-1 13/16	(1875)	5-7 11/16	(1719)	6-0 1/2	(1842)	5-6 15/16	(1700)

Standard Sizes: Clad Ultimate Casement - Eyebrow above Springline

Wood Ultimate Casement/Awning Direct Glaze Round Tops Shape - RT6 - Eyebrow Above Springline																	
CN		Width								Height							
		Masonry Opening		Masonry Opening Radius		Rough Opening		Rough Opening Radius		Masonry Opening		Masonry Opening Springline		Rough Opening		Rough Opening Springline	
		ft-in	mm	ft-in	mm	ft-in	mm	ft-in	mm	ft-in	mm	ft-in	mm	ft-in	mm	ft-in	mm
RT	**4819**	4-3 5/8	(1311)	3-5 13/16	(1062)	4-1	(1245)	3-4 1/2	(1029)	1-7 13/16	(503)	0-10 29/32	(277)	1-6 1/2	(470)	0-10 1/4	(260)
RT	**4823**	4-3 5/8	(1311)	3-5 13/16	(1062)	4-1	(1245)	3-4 1/2	(1029)	2-1 13/16	(656)	1-4 29/32	(429)	2-0 1/2	(622)	1-4 1/4	(413)
RT	**4835**	4-3 5/8	(1311)	3-5 13/16	(1062)	4-1	(1245)	3-4 1/2	(1029)	3-1 13/16	(960)	2-4 29/32	(734)	3-0 1/2	(927)	2-4 1/4	(718)
RT	**4847**	4-3 5/8	(1311)	3-5 13/16	(1062)	4-1	(1245)	3-4 1/2	(1029)	4-1 13/16	(1265)	3-4 29/32	(1039)	4-0 1/2	(1232)	3-4 1/4	(1022)
RT	**4859**	4-3 5/8	(1311)	3-5 13/16	(1062)	4-1	(1245)	3-4 1/2	(1029)	5-1 13/16	(1570)	4-4 29/32	(1344)	5-0 1/2	(1537)	4-4 1/4	(1327)
RT	**4871**	4-3 5/8	(1311)	3-5 13/16	(1062)	4-1	(1245)	3-4 1/2	(1029)	6-1 13/16	(1875)	5-4 29/32	(1648)	6-0 1/2	(1842)	5-4 1/4	(1632)
RT	**5619**	4-11 5/8	(1514)	4-7 13/16	(1418)	4-9	(1448)	4-6 1/2	(1384)	1-7 13/16	(503)	0-11 3/16	(284)	1-6 1/2	(470)	0-10 15/32	(266)
RT	**5623**	4-11 5/8	(1514)	4-7 13/16	(1418)	4-9	(1448)	4-6 1/2	(1384)	2-1 13/16	(656)	1-5 3/16	(436)	2-0 1/2	(622)	1-4 15/32	(418)
RT	**5635**	4-11 5/8	(1514)	4-7 13/16	(1418)	4-9	(1448)	4-6 1/2	(1384)	3-1 13/16	(960)	2-5 3/16	(741)	3-0 1/2	(927)	2-4 15/32	(723)
RT	**5647**	4-11 5/8	(1514)	4-7 13/16	(1418)	4-9	(1448)	4-6 1/2	(1384)	4-1 13/16	(1265)	3-5 3/16	(1046)	4-0 1/2	(1232)	3-4 15/32	(1028)
RT	**5659**	4-11 5/8	(1514)	4-7 13/16	(1418)	4-9	(1448)	4-6 1/2	(1384)	5-1 13/16	(1570)	4-5 3/16	(1351)	5-0 1/2	(1537)	4-4 15/32	(1332)
RT	**5671**	4-11 5/8	(1514)	4-7 13/16	(1418)	4-9	(1448)	4-6 1/2	(1384)	6-1 13/16	(1875)	5-5 3/16	(1656)	6-0 1/2	(1842)	5-4 15/32	(1637)
RT	**7219**	6-3 5/8	(1921)	6-1 13/16	(1875)	6-1	(1854)	6-0 1/2	(1842)	1-7 13/16	(503)	0-9 13/32	(239)	1-6 1/2	(470)	0-8 21/32	(220)
RT	**7223**	6-3 5/8	(1921)	6-1 13/16	(1875)	6-1	(1854)	6-0 1/2	(1842)	2-1 13/16	(656)	1-3 13/32	(391)	2-0 1/2	(622)	1-2 21/32	(372)
RT	**7235**	6-3 5/8	(1921)	6-1 13/16	(1875)	6-1	(1854)	6-0 1/2	(1842)	3-1 13/16	(960)	2-3 13/32	(696)	3-0 1/2	(927)	2-2 21/32	(677)
RT	**7247**	6-3 5/8	(1921)	6-1 13/16	(1875)	6-1	(1854)	6-0 1/2	(1842)	4-1 13/16	(1265)	3-3 13/32	(1001)	4-0 1/2	(1232)	3-2 21/32	(982)
RT	**7259**	6-3 5/8	(1921)	6-1 13/16	(1875)	6-1	(1854)	6-0 1/2	(1842)	5-1 13/16	(1570)	4-3 13/32	(1305)	5-0 1/2	(1537)	4-2 21/32	(1286)
RT	**7271**	6-3 5/8	(1921)	6-1 13/16	(1875)	6-1	(1854)	6-0 1/2	(1842)	6-1 13/16	(1875)	5-3 13/32	(1610)	6-0 1/2	(1842)	5-2 21/32	(1591)

Standard Sizes: Wood Ultimate Double Hung - True Half Circle and Elliptical Direct Glaze

Wood Ultimate Double Hung Direct Glaze Round Tops									
Shape - RT1 - True Half Circle									
CN		**Width**				**Height**			
		Masonry Opening		**Rough Opening**		**Masonry Opening**		**Rough Opening**	
		ft-in	**mm**	**ft-in**	**mm**	**ft-in**	**mm**	**ft-in**	**mm**
WRT	**2914**	2-8 1/2	(826)	2-6 3/8	(772)	1-4 1/4	(413)	1-3 3/16	(386)
WRT	**3115**	2-10 1/2	(876)	2-8 3/8	(822)	1-5 1/4	(438)	1-4 3/16	(411)
WRT	**3316**	3-0 1/2	(927)	2-10 3/8	(873)	1-6 1/4	(464)	1-5 3/16	(437)
WRT	**3517**	3-2 1/2	(978)	3-0 3/8	(924)	1-7 1/4	(489)	1-6 3/16	(462)
WRT	**3718**	3-4 1/2	(1029)	3-2 3/8	(975)	1-8 1/4	(514)	1-7 3/16	(487)
WRT	**4120**	3-8 1/2	(1130)	3-6 3/8	(1076)	1-10 1/4	(565)	1-9 3/16	(538)
WRT	**4522**	4-0 1/2	(1232)	3-10 3/8	(1178)	2-0 1/4	(616)	1-11 3/16	(589)
WRT	**5025**	4-5 7/8	(1368)	4-3 3/4	(1314)	2-2 15/16	(684)	2-1 7/8	(657)
WRT	**5828**	5-1 7/8	(1572)	4-11 3/4	(1518)	2-6 15/16	(786)	2-5 7/8	(759)
WRT	**6632**	5-9 7/8	(1775)	5-7 3/4	(1721)	2-10 15/16	(887)	2-9 7/8	(860)
WRT	**7437**	6-5 7/8	(1978)	6-3 3/4	(1924)	3-2 15/16	(989)	3-1 7/8	(962)
Shape - RT29 - Elliptical									
WRT	**5118**	4-5 7/8	(1368)	4-3 3/4	(1314)	1-7	(483)	1-5 15/16	(456)
WRT	**5918**	5-1 7/8	(1572)	4-11 3/4	(1518)	1-7	(483)	1-5 15/16	(456)
WRT	**6718**	5-9 7/8	(1775)	5-7 3/4	(1721)	1-7	(483)	1-5 15/16	(456)
WRT	**7518**	6-5 7/8	(1978)	6-3 3/4	(1924)	1-7	(483)	1-5 15/16	(456)

Standard Sizes: Wood Ultimate Double Hung - Eyebrow Above Springline

Wood Ultimate Double Hung Direct Glaze Round Tops Shape - RT6 - Eyebrow Above Springline																	
CN		Width								Height							
		Masonry Opening		Masonry Opening Radius		Rough Opening		Rough Opening Radius		Masonry Opening		Masonry Opening Springline		Rough Opening		Rough Opening Springline	
		ft-in	mm	ft-in	mm	ft-in	mm	ft-in	mm	ft-in	mm	ft-in	mm	ft-in	mm	ft-in	mm
RT	**2511**	2-4 1/2	(724)	2-1 3/4	(654)	2-2 3/8	(670)	2-0 1/2	(622)	1-1 3/4	(349)	0-9 7/16	(240)	1-0 1/2	(318)	0-8 5/8	(220)
RT	**2519**	2-4 1/2	(724)	2-1 3/4	(654)	2-2 3/8	(670)	2-0 1/2	(622)	1-7 3/4	(502)	1-3 7/16	(392)	1-6 1/2	(470)	1-2 5/8	(372)
RT	**2523**	2-4 1/2	(724)	2-1 3/4	(654)	2-2 3/8	(670)	2-0 1/2	(622)	2-1 3/4	(654)	1-9 7/16	(545)	2-0 1/2	(622)	1-8 5/8	(524)
RT	**2535**	2-4 1/2	(724)	2-1 3/4	(654)	2-2 3/8	(670)	2-0 1/2	(622)	3-1 3/4	(959)	2-9 7/16	(850)	3-0 1/2	(927)	2-8 5/8	(829)
RT	**2547**	2-4 1/2	(724)	2-1 3/4	(654)	2-2 3/8	(670)	2-0 1/2	(622)	4-1 3/4	(1264)	3-9 7/16	(1154)	4-0 1/2	(1232)	3-8 5/8	(1134)
RT	**2559**	2-4 1/2	(724)	2-1 3/4	(654)	2-2 3/8	(670)	2-0 1/2	(622)	5-1 3/4	(1568)	4-9 7/16	(1459)	5-0 1/2	(1537)	4-8 5/8	(1439)
RT	**2571**	2-4 1/2	(724)	2-1 3/4	(654)	2-2 3/8	(670)	2-0 1/2	(622)	6-1 3/4	(1873)	5-9 7/16	(1764)	6-0 1/2	(1842)	5-8 5/8	(1744)
RT	**2911**	2-8 1/2	(826)	2-1 3/4	(654)	2-6 3/8	(772)	2-0 1/2	(622)	1-1 3/4	(349)	0-7 31/32	(203)	1-0 1/2	(318)	0-7 1/4	(184)
RT	**2919**	2-8 1/2	(826)	2-1 3/4	(654)	2-6 3/8	(772)	2-0 1/2	(622)	1-7 3/4	(502)	1-1 31/32	(355)	1-6 1/2	(470)	1-1 1/4	(336)
RT	**2923**	2-8 1/2	(826)	2-1 3/4	(654)	2-6 3/8	(772)	2-0 1/2	(622)	2-1 3/4	(654)	1-7 31/32	(507)	2-0 1/2	(622)	1-7 1/4	(488)
RT	**2935**	2-8 1/2	(826)	2-1 3/4	(654)	2-6 3/8	(772)	2-0 1/2	(622)	3-1 3/4	(959)	2-7 31/32	(812)	3-0 1/2	(927)	2-7 1/4	(793)
RT	**2947**	2-8 1/2	(826)	2-1 3/4	(654)	2-6 3/8	(772)	2-0 1/2	(622)	4-1 3/4	(1264)	3-7 31/32	(1117)	4-0 1/2	(1232)	3-7 1/4	(1098)
RT	**2959**	2-8 1/2	(826)	2-1 3/4	(654)	2-6 3/8	(772)	2-0 1/2	(622)	5-1 3/4	(1568)	4-7 31/32	(1422)	5-0 1/2	(1537)	4-7 1/4	(1403)
RT	**2971**	2-8 1/2	(826)	2-1 3/4	(654)	2-6 3/8	(772)	2-0 1/2	(622)	6-1 3/4	(1873)	5-7 31/32	(1727)	6-0 1/2	(1842)	5-7 1/4	(1708)
RT	**3111**	2-10 1/2	(876)	2-7 3/4	(806)	2-8 3/8	(822)	2-6 1/2	(775)	1-1 3/4	(349)	0-8 21/32	(220)	1-0 1/2	(318)	0-7 7/8	(199)
RT	**3119**	2-10 1/2	(876)	2-7 3/4	(806)	2-8 3/8	(822)	2-6 1/2	(775)	1-7 3/4	(502)	1-2 21/32	(372)	1-6 1/2	(470)	1-1 7/8	(352)
RT	**3123**	2-10 1/2	(876)	2-7 3/4	(806)	2-8 3/8	(822)	2-6 1/2	(775)	2-1 3/4	(654)	1-8 21/32	(525)	2-0 1/2	(622)	1-7 7/8	(504)
RT	**3135**	2-10 1/2	(876)	2-7 3/4	(806)	2-8 3/8	(822)	2-6 1/2	(775)	3-1 3/4	(959)	2-8 21/32	(829)	3-0 1/2	(927)	2-7 7/8	(809)
RT	**3147**	2-10 1/2	(876)	2-7 3/4	(806)	2-8 3/8	(822)	2-6 1/2	(775)	4-1 3/4	(1264)	3-8 21/32	(1134)	4-0 1/2	(1232)	3-7 7/8	(1114)
RT	**3159**	2-10 1/2	(876)	2-7 3/4	(806)	2-8 3/8	(822)	2-6 1/2	(775)	5-1 3/4	(1568)	4-8 21/32	(1439)	5-0 1/2	(1537)	4-7 7/8	(1419)
RT	**3171**	2-10 1/2	(876)	2-7 3/4	(806)	2-8 3/8	(822)	2-6 1/2	(775)	6-1 3/4	(1873)	5-8 21/32	(1744)	6-0 1/2	(1842)	5-7 7/8	(1723)
RT	**3311**	3-0 1/2	(927)	2-7 3/4	(806)	2-10 3/8	(873)	2-6 1/2	(775)	1-1 3/4	(349)	0-7 31/32	(203)	1-0 1/2	(318)	0-7 3/16	(183)
RT	**3319**	3-0 1/2	(927)	2-7 3/4	(806)	2-10 3/8	(873)	2-6 1/2	(775)	1-7 3/4	(502)	1-1 31/32	(355)	1-6 1/2	(470)	1-1 3/16	(335)
RT	**3323**	3-0 1/2	(927)	2-7 3/4	(806)	2-10 3/8	(873)	2-6 1/2	(775)	2-1 3/4	(654)	1-7 31/32	(508)	2-0 1/2	(622)	1-7 3/16	(488)
RT	**3335**	3-0 1/2	(927)	2-7 3/4	(806)	2-10 3/8	(873)	2-6 1/2	(775)	3-1 3/4	(959)	2-7 31/32	(812)	3-0 1/2	(927)	2-7 3/16	(792)
RT	**3347**	3-0 1/2	(927)	2-7 3/4	(806)	2-10 3/8	(873)	2-6 1/2	(775)	4-1 3/4	(1264)	3-7 31/32	(1117)	4-0 1/2	(1232)	3-7 3/16	(1097)
RT	**3359**	3-0 1/2	(927)	2-7 3/4	(806)	2-10 3/8	(873)	2-6 1/2	(775)	5-1 3/4	(1568)	4-7 31/32	(1422)	5-0 1/2	(1537)	4-7 3/16	(1402)
RT	**3371**	3-0 1/2	(927)	2-7 3/4	(806)	2-10 3/8	(873)	2-6 1/2	(775)	6-1 3/4	(1873)	5-7 31/32	(1727)	6-0 1/2	(1842)	5-7 3/16	(1707)
RT	**3511**	3-2 1/2	(978)	2-7 3/4	(806)	3-0 3/8	(924)	2-6 1/2	(775)	1-1 3/4	(349)	0-7 1/4	(184)	1-0 1/2	(318)	0-6 1/2	(165)
RT	**3519**	3-2 1/2	(978)	2-7 3/4	(806)	3-0 3/8	(924)	2-6 1/2	(775)	1-7 3/4	(502)	1-1 1/4	(337)	1-6 1/2	(470)	1-0 1/2	(317)
RT	**3523**	3-2 1/2	(978)	2-7 3/4	(806)	3-0 3/8	(924)	2-6 1/2	(775)	2-1 3/4	(654)	1-7 1/4	(489)	2-0 1/2	(622)	1-6 1/2	(469)
RT	**3535**	3-2 1/2	(978)	2-7 3/4	(806)	3-0 3/8	(924)	2-6 1/2	(775)	3-1 3/4	(959)	2-7 1/4	(794)	3-0 1/2	(927)	2-6 1/2	(774)
RT	**3547**	3-2 1/2	(978)	2-7 3/4	(806)	3-0 3/8	(924)	2-6 1/2	(775)	4-1 3/4	(1264)	3-7 1/4	(1099)	4-0 1/2	(1232)	3-6 1/2	(1079)
RT	**3559**	3-2 1/2	(978)	2-7 3/4	(806)	3-0 3/8	(924)	2-6 1/2	(775)	5-1 3/4	(1568)	4-7 1/4	(1403)	5-0 1/2	(1537)	4-6 1/2	(1384)
RT	**3571**	3-2 1/2	(978)	2-7 3/4	(806)	3-0 3/8	(924)	2-6 1/2	(775)	6-1 3/4	(1873)	5-7 1/4	(1708)	6-0 1/2	(1842)	5-6 1/2	(1689)
RT	**3711**	3-4 1/2	(1029)	3-5 3/4	(1060)	3-2 3/8	(975)	3-4 1/2	(1029)	1-1 3/4	(349)	0-8 1/2	(216)	1-0 1/2	(318)	0-7 5/8	(195)
RT	**3719**	3-4 1/2	(1029)	3-5 3/4	(1060)	3-2 3/8	(975)	3-4 1/2	(1029)	1-7 3/4	(502)	1-2 1/2	(369)	1-6 1/2	(470)	1-1 5/8	(347)
RT	**3723**	3-4 1/2	(1029)	3-5 3/4	(1060)	3-2 3/8	(975)	3-4 1/2	(1029)	2-1 3/4	(654)	1-8 1/2	(521)	2-0 1/2	(622)	1-7 5/8	(500)
RT	**3735**	3-4 1/2	(1029)	3-5 3/4	(1060)	3-2 3/8	(975)	3-4 1/2	(1029)	3-1 3/4	(959)	2-8 1/2	(826)	3-0 1/2	(927)	2-7 5/8	(804)

Standard Sizes: Wood Ultimate Double Hung - Eyebrow Above Springline

Wood Ultimate Double Hung Direct Glaze Round Tops Shape - RT6 - Eyebrow Above Springline																	
CN		Width								Height							
		Masonry Opening		Masonry Opening Radius		Rough Opening		Rough Opening Radius		Masonry Opening		Masonry Opening Springline		Rough Opening		Rough Opening Springline	
		ft-in	mm	ft-in	mm	ft-in	mm	ft-in	mm	ft-in	mm	ft-in	mm	ft-in	mm	ft-in	mm
RT	**3747**	3-4 1/2	(1029)	3-5 3/4	(1060)	3-2 3/8	(975)	3-4 1/2	(1029)	4-1 3/4	(1264)	3-8 1/2	(1131)	4-0 1/2	(1232)	3-7 5/8	(1109)
RT	**3759**	3-4 1/2	(1029)	3-5 3/4	(1060)	3-2 3/8	(975)	3-4 1/2	(1029)	5-1 3/4	(1568)	4-8 1/2	(1435)	5-0 1/2	(1537)	4-7 5/8	(1414)
RT	**3771**	3-4 1/2	(1029)	3-5 3/4	(1060)	3-2 3/8	(975)	3-4 1/2	(1029)	6-1 3/4	(1873)	5-8 1/2	(1740)	6-0 1/2	(1842)	5-7 5/8	(1719)
RT	**4111**	3-8 1/2	(1130)	3-5 3/4	(1060)	3-6 3/8	(1076)	3-4 1/2	(1029)	1-1 3/4	(349)	0-7 5/16	(186)	1-0 1/2	(318)	0-6 1/2	(166)
RT	**4119**	3-8 1/2	(1130)	3-5 3/4	(1060)	3-6 3/8	(1076)	3-4 1/2	(1029)	1-7 3/4	(502)	1-1 5/16	(339)	1-6 1/2	(470)	1-0 1/2	(318)
RT	**4123**	3-8 1/2	(1130)	3-5 3/4	(1060)	3-6 3/8	(1076)	3-4 1/2	(1029)	2-1 3/4	(654)	1-7 5/16	(491)	2-0 1/2	(622)	1-6 1/2	(470)
RT	**4135**	3-8 1/2	(1130)	3-5 3/4	(1060)	3-6 3/8	(1076)	3-4 1/2	(1029)	3-1 3/4	(959)	2-7 5/16	(796)	3-0 1/2	(927)	2-6 1/2	(775)
RT	**4147**	3-8 1/2	(1130)	3-5 3/4	(1060)	3-6 3/8	(1076)	3-4 1/2	(1029)	4-1 3/4	(1264)	3-7 5/16	(1101)	4-0 1/2	(1232)	3-6 1/2	(1080)
RT	**4159**	3-8 1/2	(1130)	3-5 3/4	(1060)	3-6 3/8	(1076)	3-4 1/2	(1029)	5-1 3/4	(1568)	4-7 5/16	(1405)	5-0 1/2	(1537)	4-6 1/2	(1385)
RT	**4171**	3-8 1/2	(1130)	3-5 3/4	(1060)	3-6 3/8	(1076)	3-4 1/2	(1029)	6-1 3/4	(1873)	5-7 5/16	(1710)	6-0 1/2	(1842)	5-6 1/2	(1690)
RT	**4519**	4-0 1/2	(1232)	3-5 3/4	(1060)	3-10 3/8	(1178)	3-4 1/2	(1029)	1-7 3/4	(502)	1-0	(304)	1-6 1/2	(470)	0-11 3/16	(285)
RT	**4523**	4-0 1/2	(1232)	3-5 3/4	(1060)	3-10 3/8	(1178)	3-4 1/2	(1029)	2-1 3/4	(654)	1-6	(457)	2-0 1/2	(622)	1-5 3/16	(437)
RT	**4535**	4-0 1/2	(1232)	3-5 3/4	(1060)	3-10 3/8	(1178)	3-4 1/2	(1029)	3-1 3/4	(959)	2-6	(762)	3-0 1/2	(927)	2-5 3/16	(742)
RT	**4547**	4-0 1/2	(1232)	3-5 3/4	(1060)	3-10 3/8	(1178)	3-4 1/2	(1029)	4-1 3/4	(1264)	3-6	(1066)	4-0 1/2	(1232)	3-5 3/16	(1047)
RT	**4559**	4-0 1/2	(1232)	3-5 3/4	(1060)	3-10 3/8	(1178)	3-4 1/2	(1029)	5-1 3/4	(1568)	4-6	(1371)	5-0 1/2	(1537)	4-5 3/16	(1351)
RT	**4571**	4-0 1/2	(1232)	3-5 3/4	(1060)	3-10 3/8	(1178)	3-4 1/2	(1029)	6-1 3/4	(1873)	5-6	(1676)	6-0 1/2	(1842)	5-5 3/16	(1656)
RT	**5119**	4-5 7/8	(1368)	3-5 3/4	(1060)	4-3 3/4	(1314)	3-4 1/2	(1029)	1-7 3/4	(502)	0-9 29/32	(251)	1-6 1/2	(470)	0-9 1/8	(233)
RT	**5123**	4-5 7/8	(1368)	3-5 3/4	(1060)	4-3 3/4	(1314)	3-4 1/2	(1029)	2-1 3/4	(654)	1-3 29/32	(404)	2-0 1/2	(622)	1-3 1/8	(385)
RT	**5135**	4-5 7/8	(1368)	3-5 3/4	(1060)	4-3 3/4	(1314)	3-4 1/2	(1029)	3-1 3/4	(959)	2-3 29/32	(709)	3-0 1/2	(927)	2-3 1/8	(690)
RT	**5147**	4-5 7/8	(1368)	3-5 3/4	(1060)	4-3 3/4	(1314)	3-4 1/2	(1029)	4-1 3/4	(1264)	3-3 29/32	(1013)	4-0 1/2	(1232)	3-3 1/8	(995)
RT	**5159**	4-5 7/8	(1368)	3-5 3/4	(1060)	4-3 3/4	(1314)	3-4 1/2	(1029)	5-1 3/4	(1568)	4-3 29/32	(1318)	5-0 1/2	(1537)	4-3 1/8	(1299)
RT	**5171**	4-5 7/8	(1368)	3-5 3/4	(1060)	4-3 3/4	(1314)	3-4 1/2	(1029)	6-1 3/4	(1873)	5-3 29/32	(1623)	6-0 1/2	(1842)	5-3 1/8	(1604)
RT	**5919**	5-1 7/8	(1572)	4-7 3/4	(1416)	4-11 3/4	(1518)	4-6 1/2	(1384)	1-7 3/4	(502)	0-10 3/8	(264)	1-6 1/2	(470)	0-9 9/16	(243)
RT	**5923**	5-1 7/8	(1572)	4-7 3/4	(1416)	4-11 3/4	(1518)	4-6 1/2	(1384)	2-1 3/4	(654)	1-4 3/8	(416)	2-0 1/2	(622)	1-3 9/16	(396)
RT	**5935**	5-1 7/8	(1572)	4-7 3/4	(1416)	4-11 3/4	(1518)	4-6 1/2	(1384)	3-1 3/4	(959)	2-4 3/8	(721)	3-0 1/2	(927)	2-3 9/16	(701)
RT	**5947**	5-1 7/8	(1572)	4-7 3/4	(1416)	4-11 3/4	(1518)	4-6 1/2	(1384)	4-1 3/4	(1264)	3-4 3/8	(1026)	4-0 1/2	(1232)	3-3 9/16	(1005)
RT	**5959**	5-1 7/8	(1572)	4-7 3/4	(1416)	4-11 3/4	(1518)	4-6 1/2	(1384)	5-1 3/4	(1568)	4-4 3/8	(1330)	5-0 1/2	(1537)	4-3 9/16	(1310)
RT	**5971**	5-1 7/8	(1572)	4-7 3/4	(1416)	4-11 3/4	(1518)	4-6 1/2	(1384)	6-1 3/4	(1873)	5-4 3/8	(1635)	6-0 1/2	(1842)	5-3 9/16	(1615)
RT	**6719**	5-9 7/8	(1775)	6-1 3/4	(1873)	5-7 3/4	(1721)	6-0 1/2	(1842)	1-7 3/4	(502)	0-10 15/16	(278)	1-6 1/2	(470)	0-10 1/8	(257)
RT	**6723**	5-9 7/8	(1775)	6-1 3/4	(1873)	5-7 3/4	(1721)	6-0 1/2	(1842)	2-1 3/4	(654)	1-4 15/16	(431)	2-0 1/2	(622)	1-4 1/8	(409)
RT	**6735**	5-9 7/8	(1775)	6-1 3/4	(1873)	5-7 3/4	(1721)	6-0 1/2	(1842)	3-1 3/4	(959)	2-4 15/16	(735)	3-0 1/2	(927)	2-4 1/8	(714)
RT	**6747**	5-9 7/8	(1775)	6-1 3/4	(1873)	5-7 3/4	(1721)	6-0 1/2	(1842)	4-1 3/4	(1264)	3-4 15/16	(1040)	4-0 1/2	(1232)	3-4 1/8	(1019)
RT	**6759**	5-9 7/8	(1775)	6-1 3/4	(1873)	5-7 3/4	(1721)	6-0 1/2	(1842)	5-1 3/4	(1568)	4-4 15/16	(1345)	5-0 1/2	(1537)	4-4 1/8	(1323)
RT	**6771**	5-9 7/8	(1775)	6-1 3/4	(1873)	5-7 3/4	(1721)	6-0 1/2	(1842)	6-1 3/4	(1873)	5-4 15/16	(1650)	6-0 1/2	(1842)	5-4 1/8	(1628)
RT	**7519**	6-5 7/8	(1978)	6-1 3/4	(1873)	6-3 3/4	(1924)	6-0 1/2	(1842)	1-7 3/4	(502)	0-8 5/8	(219)	1-6 1/2	(470)	0-7 13/16	(199)
RT	**7523**	6-5 7/8	(1978)	6-1 3/4	(1873)	6-3 3/4	(1924)	6-0 1/2	(1842)	2-1 3/4	(654)	1-2 5/8	(372)	2-0 1/2	(622)	1-1 13/16	(351)
RT	**7535**	6-5 7/8	(1978)	6-1 3/4	(1873)	6-3 3/4	(1924)	6-0 1/2	(1842)	3-1 3/4	(959)	2-2 5/8	(676)	3-0 1/2	(927)	2-1 13/16	(656)
RT	**7547**	6-5 7/8	(1978)	6-1 3/4	(1873)	6-3 3/4	(1924)	6-0 1/2	(1842)	4-1 3/4	(1264)	3-2 5/8	(981)	4-0 1/2	(1232)	3-1 13/16	(961)
RT	**7559**	6-5 7/8	(1978)	6-1 3/4	(1873)	6-3 3/4	(1924)	6-0 1/2	(1842)	5-1 3/4	(1568)	4-2 5/8	(1286)	5-0 1/2	(1537)	4-1 13/16	(1265)
RT	**7571**	6-5 7/8	(1978)	6-1 3/4	(1873)	6-3 3/4	(1924)	6-0 1/2	(1842)	6-1 3/4	(1873)	5-2 5/8	(1591)	6-0 1/2	(1842)	5-1 13/16	(1570)

Section Details: Wood Direct Glaze Round Top

Scale: 3' = 1' 0"

Insulating Glass

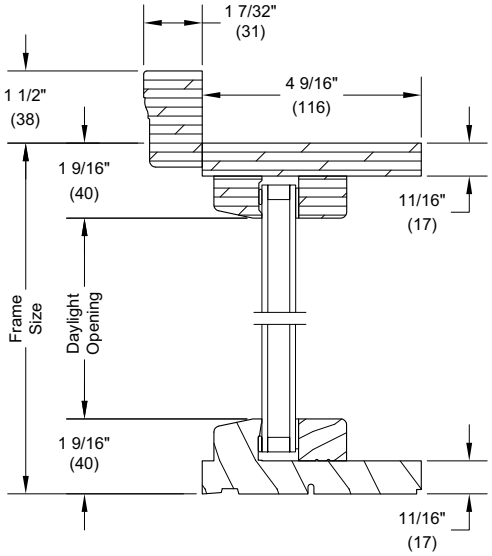

Head Jamb and Sill

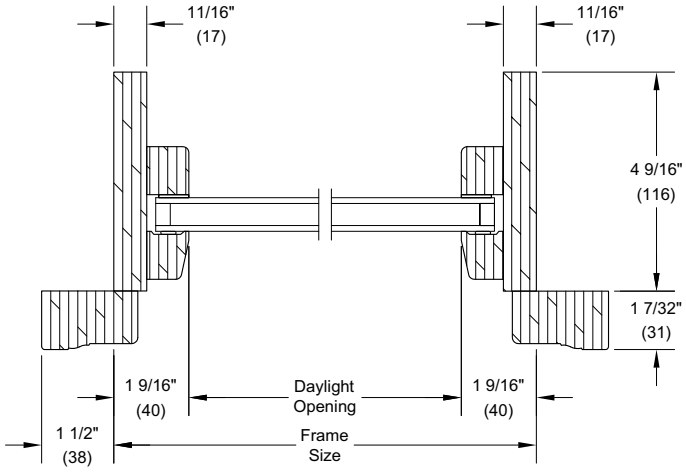

Jambs

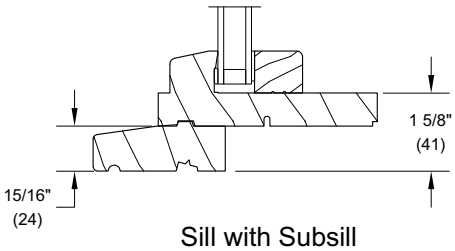

Sill with Subsill

Casing Overlap Distances								
Product Type	RT2				RT6			
	Head		Jamb		Head		Jamb	
	in	mm	in	mm	in	mm	in	mm
Direct Glaze	1/2	(13)	1/2	(13)	1/2	(13)	1/2	(13)
Wood Ultimate Casment Direct Glaze	7/16	(11)	7/16	(11)	7/16	(11)	7/16	(11)
Wood Ultimate Double Hung Direct Glaze	11/16	(17)	11/16	(17)	1/2	(13)	11/16	(17)

Single Glaze

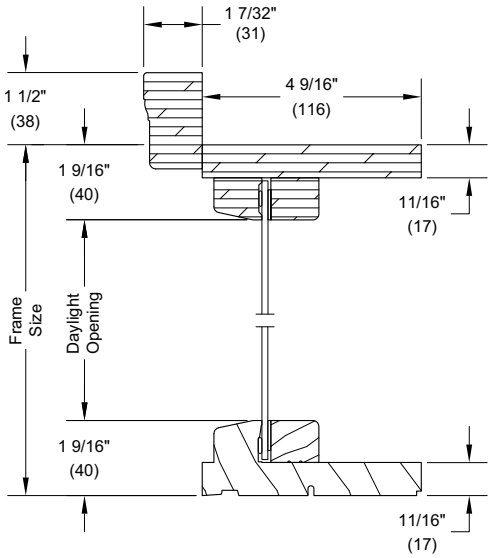

Head Jamb and Sill

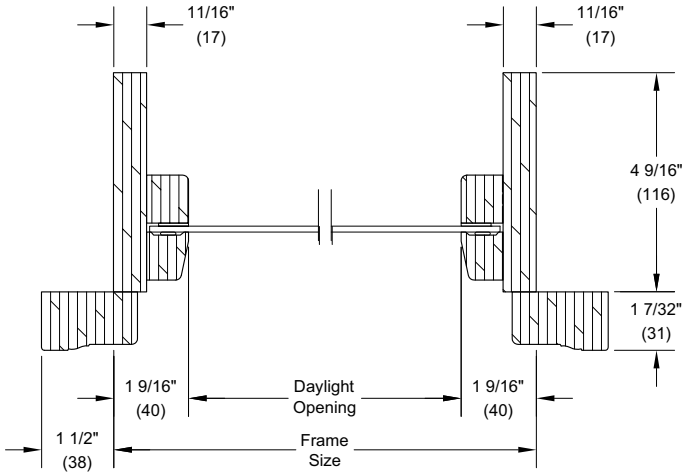

Jambs

NOTE: Single glaze is not available with CE mark

Section Details: Wood Direct Glaze Round Top Mullion Options

Scale: 3' = 1' 0"

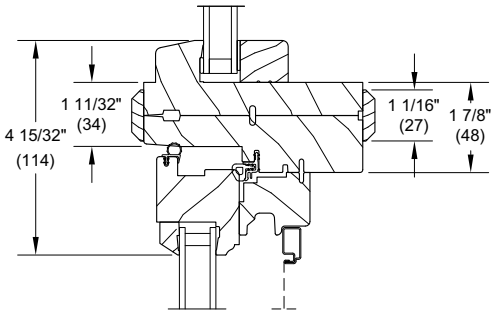

Wood Direct Glaze Round Top
Over Wood Ultimate Casement

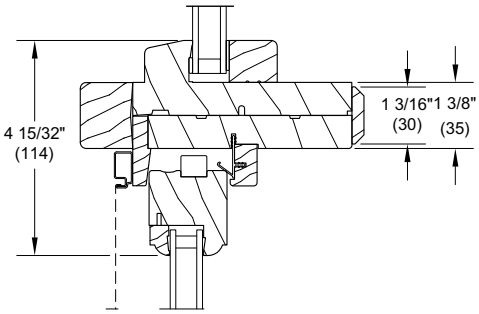

Wood Direct Glaze Round Top
over Wood Ultimate Double Hung

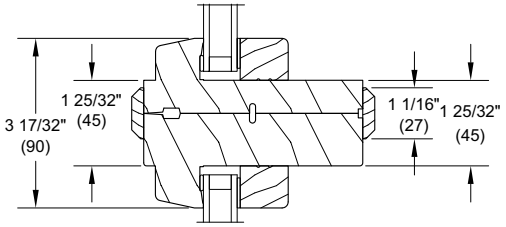

Wood Direct Glaze Round Top
over Wood Polygon

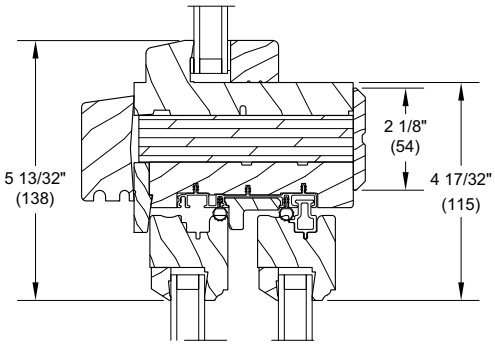

Wood Direct Glaze Round Top
Over Wood Ultimate Glider

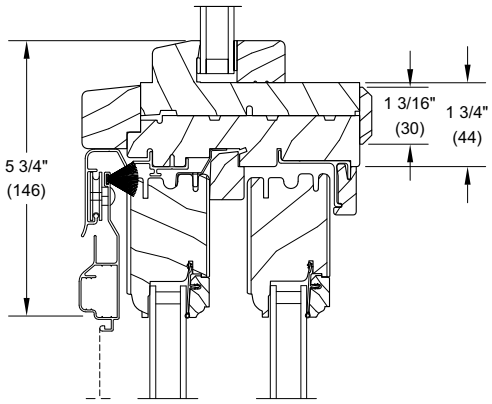

Wood Direct Glaze Round Top
over Wood Sliding Patio Door

Section Details: Wood Direct Glaze Round Top Mullion Options

Scale: 3' = 1' 0"

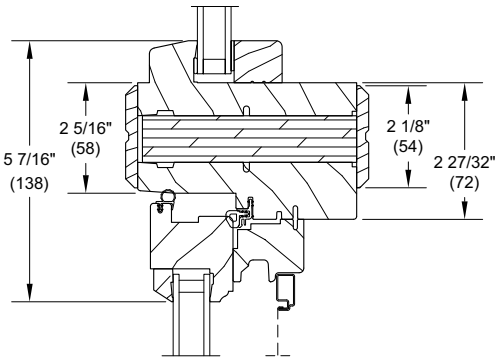

Wood Direct Glaze Round Top
Over Wood Ultimate Casement

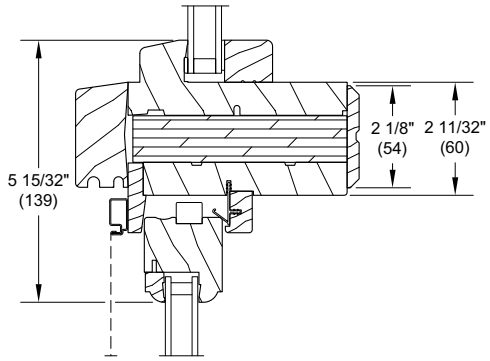

Wood Direct Glaze Round Top
over Wood Ultimate Double Hung

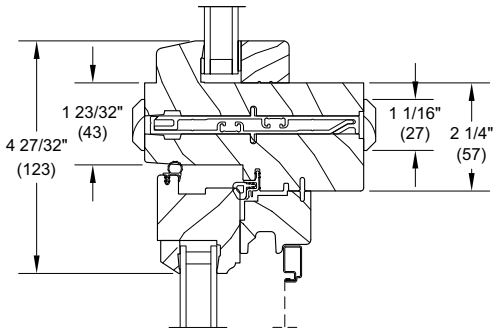

Wood Direct Glaze Round Top
Over Wood Ultimate Casement

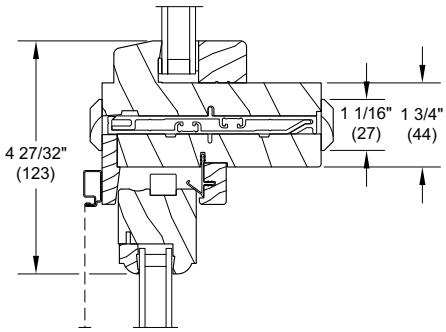

Wood Direct Glaze Round Top
over Wood Ultimate Double Hung

Wood Direct Glaze Round Top Shape Reference

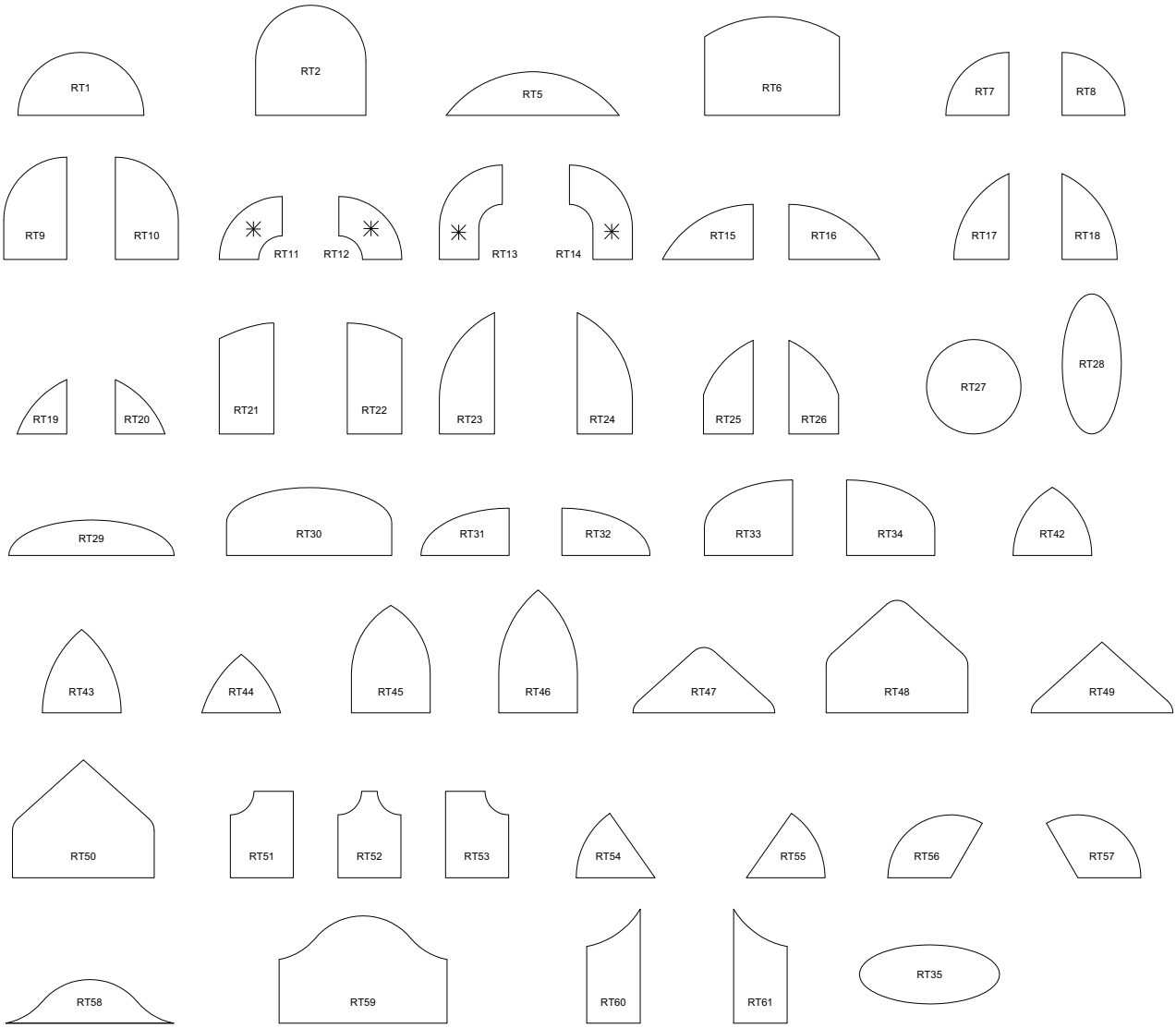

NOTE: For RT11, RT12, RT13 or RT14, please contact your Marvin representative for limitations.

Single Glaze Divided Lite Options

Single Glaze

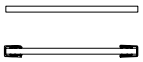

Single Glaze
W/ Energy Panel

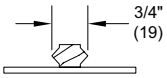

3/4" Grille

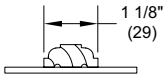

1 1/8" Grille

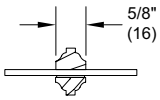

5/8" SDL

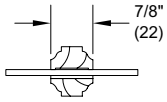

7/8" SDL

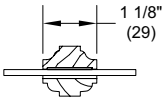

1 1/8" SDL

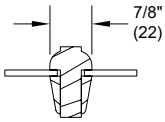

7/8" SG-ADL

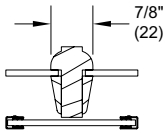

7/8" SG-ADL
W/ Energy Panel

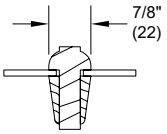

7/8" SG-ADL
Full Depth Munt

NOTE: ADL and single glaze are not available with CE mark

Wood Direct Glaze Polygon and Round Top

Standard Insulating Glass Divided Lite Options

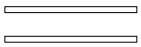

Insulating Glass

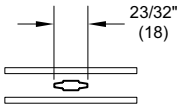

Aluminum 11/16"
Contour GBG

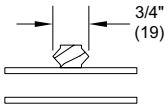

3/4" Grille

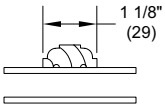

1 1/8" Grille

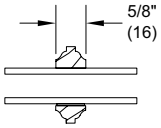

5/8" SDL

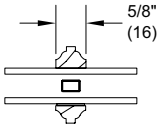

5/8" SDL
W/Spacer

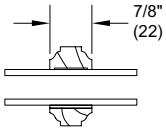

7/8" SDL

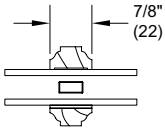

7/8" SDL
W/Spacer Bar

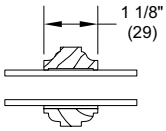

1 1/8" SDL

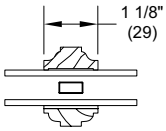

1 1/8" SDL
W/Spacer Bar

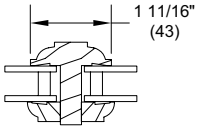

1 11/16" IG ADL

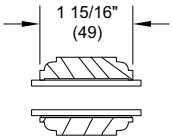

1 15/16" SDL

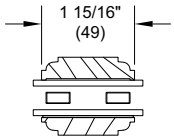

1 15/16" SDL
W/Two Spacer Bars

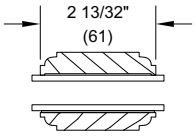

2 13/32" SDL

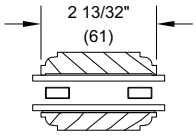

2 13/32" SDL
W/Two Spacer Bar

Optional Interior Square Simulated Divided Lite

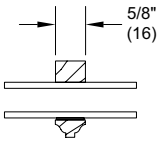

5/8" SDL

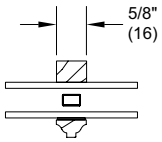

5/8" SDL
W/Spacer

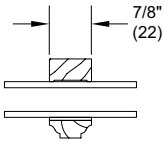

7/8" SDL

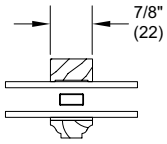

7/8" SDL
W/Spacer Bar

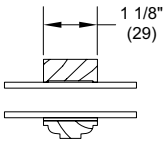

1 1/8" SDL

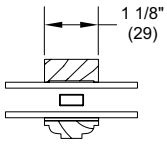

1 1/8" SDL
W/Spacer Bar

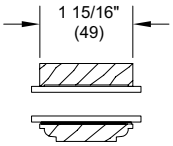

1 15/16" SDL

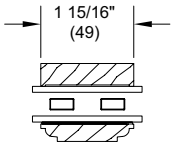

1 15/16" SDL
W/Two Spacer Bars

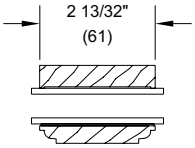

2 13/32" SDL

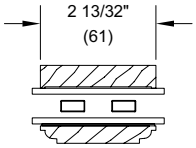

2 13/32" SDL
W/Two Spacer Bar