Clad Ultimate Glider

Unit Features 1
Standard Divided Lite Option 2
Optional Interior Square Simulated Divided Lite 3
Egress and Vent Openings: XO, OX, XX 4
Daylight Opening: XO, OX, XX 5
Egress and Vent Openings: XOX 6
Daylight Measurements: XOX 7
Daylight Measurements: Picture Units 8
Minimum and Maximum Guidelines 9
Certified Sizes and Ratings: XO, OX, XX 10
Certified Sizes and Rating: Picture and XOX 11
Measurement Conversions: XO, OX, XX 12
Measurement Conversions: XOX and Picture 13
Standard Unit Measurements: XO, OX, XX, XOX 15
Standard Unit Measurements: Picture 16
Section Details: Operating/Triple Sash 17
Section Details: Picture and Casing Options 18
Section Details: Mullions 19

Unit Features

Clad Ultimate Glider: CUGL

Clad Ultimate Glider Triple Sash: CUGLTS

Clad Ultimate Glider Picture: CUGLP

Frame:

- Exterior frame thickness: Nominally 1 21/32" (42).
- Base Frame Width standard is 4 9/16" (116).
- Available configurations: CUGL (XO, OX, XX) CUGLTS (XOX), and CUGLP (O).
- With a XX operation, there is a beige or white vinyl sash track exposed on exterior sill.

Sash:

- Sash thickness: Nominally 1 9/16" (40).
- Operating sash primary meeting stile is a nominal face 1 23/32" (44) X 1 7/32" (31) thick. Secondary meeting stile is a nominal face 2 3/16" (56) X 1 29/32" (48) thick.
- XO and OX configurations contain a stationary sash and an operating sash that moves horizontally.
- XX configuration contains two operating sash that both move horizontally.
- XOX configuration contains an operator sash to each side of a stationary center sash.
- O configuration contains a single inoperable sash.
- Standard sash sticking profile is Ogee, optional interior Square sticking.
- Different sash option allows unequal sash widths, unique lite cuts for each sash or different glazing in each sash.
- Operating sash is removable for cleaning.

Hardware:

- The glider uses a single handle actuation multi-point lock system and sash retainer bar for tilting or removing the sash to the interior.
- One die cast zinc handle activates one or two latches, depending on the unit height, into one or two keepers on the secondary sash. The bottom of the lock handle is inset approximately 5" (127) from bottom of the sill into the meeting stile of the primary sash and is used to feature a secondary handle, field applied on the secondary sash to assist in operation.
- Latch has an indicator tab that extends when the sash is in a closed position and lock is not locked.
- XX units will have a secondary handle that aids in the sliding of the secondary sash.
- The standard color of the handle is Satin Taupe. Optional finishes are: White, Bronze, Brass, Antique Brass, Polished Chrome, Satin Chrome, Oil Rubbed Bronze and Satin Nickel.

Weather Strip:

- Exterior frame weather strip is bulb type. The colors are: White, Beige or Black. The default color depends upon the color of the cladding.

Insect Screens:

- The standard screen is roll formed aluminum and fits over the operating sash only for XO and OX operating units.
- XX units will have a screen that covers the entire window opening. The screen will be made in two parts that connect at the meeting stiles of the unit.
- XOX will have screens that cover the active sash opening; no full unit screen configuration in available.
- Aluminum surround to match exterior frame clad color.
- Screen mesh: Standard is Charcoal Fiberglass. Optional screen mesh is Charcoal High Transparency Fiberglass Mesh, Charcoal Aluminum Wire, Black Aluminum Wire, Bright Aluminum Wire, or Bright Bronze Aluminum Wire.

Combination Storm and Screen:

- Frame: Extruded aluminum frame .045" (1.1) thick. Color: Stone White, Arctic White, Bronze, Bahama Brown, Pebble Gray and Evergreen.
- Insect screen: Screen mesh Charcoal Aluminum Wire.
- Weather strip: Pile weather strip between operating panels and at stiles of main frame. Dual seal weather strip at center rail.
- Hardware: Spring loaded latches to secure storm panel.Metal pulls on sliding storm panels.
- The combination for the two sash units, (XO, OX, and XX) will have 1 active panel.
- The combination for the XOX units will have operating panels on each end.

Glass:

- Glazing seal: Silicone glazed.
- Standard glass is insulating LoĒ²272® with Argon or Air.
- Optional glazing available: LoĒ180™ with Argon or Air, LoĒ 366® with Argon or Air, clear, tints, tempered, obscure and others.
- Insulating glass will be altitude adjusted with capillary tubes for higher elevations. Argon gas is not available for elevations that require capillary tubes.

Standard Divided Lite Option

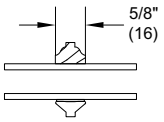

5/8" SDL

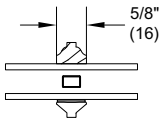

5/8" SDL
W/Spacer

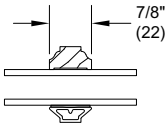

7/8" SDL

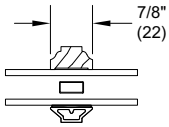

7/8" SDL
W/Spacer Bar

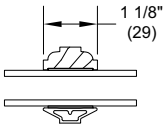

1 1/8" SDL

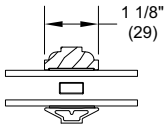

1 1/8" SDL
W/Spacer Bar

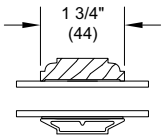

1 3/4" SDL

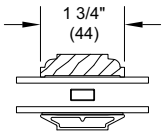

1 3/4" SDL
W/One Spacer Bar

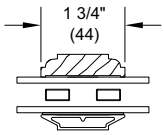

1 3/4" SDL
W/Two Spacer Bars

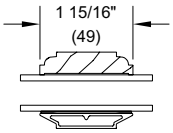

1 15/16 " SDL

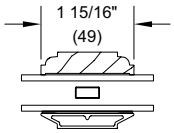

1 15/16 " SDL
W/One Spacer Bar

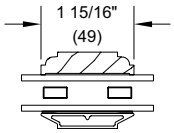

1 15/16 " SDL
W/Two Spacer Bar

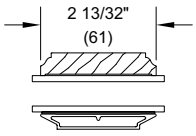

2 13/32" SDL

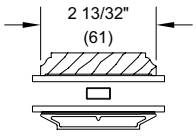

2 13/32" SDL
W/One Spacer Bar

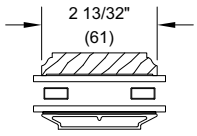

2 13/32" SDL
W/Two Spacer Bar

Optional Interior Square Simulated Divided Lite

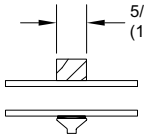

5/8" SDL

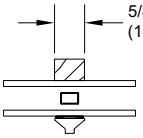

5/8" SDL
W/Spacer

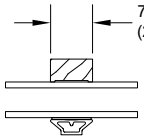

7/8" SDL

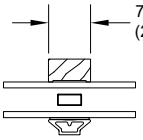

7/8" SDL
W/Spacer Bar

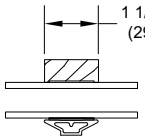

1 1/8" SDL

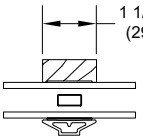

1 1/8" SDL
W/Spacer Bar

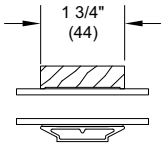

1 3/4" SDL

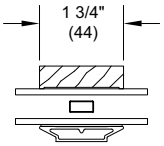

1 3/4" SDL
W/One Spacer Bar

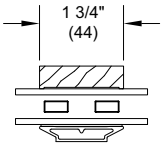

1 3/4" SDL
W/Two Spacer Bars

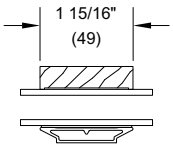

1 15/16 " SDL

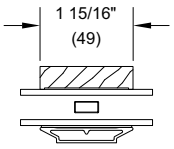

1 15/16 " SDL
W/One Spacer Bar

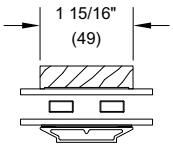

1 15/16" SDL
W/Two Spacer Bar

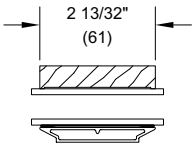

2 13/32" SDL

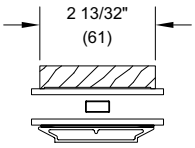

2 13/32" SDL
W/One Spacer Bar

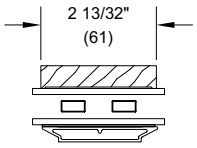

2 13/32" SDL
W/Two Spacer Bar

Egress and Vent Openings: XO, OX, XX

CN		Clear Opening Width		Clear Opening Height		Egress /Vent Opening	
		ft - in	mm	ft - in	mm	ft^2	m^2
3020		1-2 5/16	(364)	1-7 5/16	(490)	1.92	(0.18)
3026		1-2 5/16	(364)	2-1 5/16	(642)	2.52	(0.23)
3030		1-2 5/16	(364)	2-7 5/16	(795)	3.11	(0.29)
3036		1-2 5/16	(364)	3-1 5/16	(947)	3.71	(0.34)
3040		1-2 5/16	(364)	3-7 5/16	(1100)	4.31	(0.40)
3046		1-2 5/16	(364)	4-1 5/16	(1252)	4.90	(0.46)
3050		1-2 5/16	(364)	4-7 5/16	(1404)	5.50	(0.51)
3056		1-2 5/16	(364)	5-1 5/16	(1557)	6.10	(0.57)
3060		1-2 5/16	(364)	5-7 5/16	(1709)	6.69	(0.62)
3620		1-5 5/16	(440)	1-7 5/16	(490)	2.32	(0.22)
3626		1-5 5/16	(440)	2-1 5/16	(642)	3.04	(0.28)
3630		1-5 5/16	(440)	2-7 5/16	(795)	3.76	(0.35)
3636		1-5 5/16	(440)	3-1 5/16	(947)	4.49	(0.42)
3640		1-5 5/16	(440)	3-7 5/16	(1100)	5.21	(0.48)
3646		1-5 5/16	(440)	4-1 5/16	(1252)	5.93	(0.55)
3650		1-5 5/16	(440)	4-7 5/16	(1404)	6.65	(0.62)
3656		1-5 5/16	(440)	5-1 5/16	(1557)	7.37	(0.68)
3660		1-5 5/16	(440)	5-7 5/16	(1709)	8.09	(0.75)
4020		1-8 5/16	(516)	1-7 5/16	(490)	2.72	(0.25)
4026		1-8 5/16	(516)	2-1 5/16	(642)	3.57	(0.33)
4030		1-8 5/16	(516)	2-7 5/16	(795)	4.42	(0.41)
4036		1-8 5/16	(516)	3-1 5/16	(947)	5.26	(0.49)
4040	E	1-8 5/16	(516)	3-7 5/16	(1100)	6.11	(0.57)
4046	E	1-8 5/16	(516)	4-1 5/16	(1252)	6.96	(0.65)
4050	E	1-8 5/16	(516)	4-7 5/16	(1404)	7.80	(0.72)
4056	E	1-8 5/16	(516)	5-1 5/16	(1557)	8.65	(0.80)
4060	E	1-8 5/16	(516)	5-7 5/16	(1709)	9.50	(0.88)
4620		1-11 5/16	(592)	1-7 5/16	(490)	3.12	(0.29)
4626		1-11 5/16	(592)	2-1 5/16	(642)	4.10	(0.38)
4630		1-11 5/16	(592)	2-7 5/16	(795)	5.07	(0.47)
4636	E	1-11 5/16	(592)	3-1 5/16	(947)	6.04	(0.56)

CN		Clear Opening Width		Clear Opening Height		Egress/Vent Opening	
		ft - in	mm	ft - in	mm	ft^2	m^2
4640	E	1-11 5/16	(592)	3-7 5/16	(1100)	7.01	(0.65)
4646	E	1-11 5/16	(592)	4-1 5/16	(1252)	7.98	(0.74)
4650	E	1-11 5/16	(592)	4-7 5/16	(1404)	8.95	(0.83)
4656	E	1-11 5/16	(592)	5-1 5/16	(1557)	9.93	(0.92)
4660	E	1-11 5/16	(592)	5-7 5/16	(1709)	10.90	(1.01)
5020		2-2 5/16	(669)	1-7 5/16	(490)	3.53	(0.33)
5026		2-2 5/16	(669)	2-1 5/16	(642)	4.62	(0.43)
5030	E	2-2 5/16	(669)	2-7 5/16	(795)	5.72	(0.53)
5036	E	2-2 5/16	(669)	3-1 5/16	(947)	6.82	(0.63)
5040	E	2-2 5/16	(669)	3-7 5/16	(1100)	7.91	(0.74)
5046	E	2-2 5/16	(669)	4-1 5/16	(1252)	9.01	(0.84)
5050	E	2-2 5/16	(669)	4-7 5/16	(1404)	10.11	(0.94)
5056	E	2-2 5/16	(669)	5-1 5/16	(1557)	11.20	(1.04)
5060	E	2-2 5/16	(669)	5-7 5/16	(1709)	12.30	(1.14)
5620		2-5 5/16	(745)	1-7 5/16	(490)	3.93	(0.36)
5626		2-5 5/16	(745)	2-1 5/16	(642)	5.15	(0.48)
5630	E	2-5 5/16	(745)	2-7 5/16	(795)	6.37	(0.59)
5636	E	2-5 5/16	(745)	3-1 5/16	(947)	7.59	(0.71)
5640	E	2-5 5/16	(745)	3-7 5/16	(1100)	8.81	(0.82)
5646	E	2-5 5/16	(745)	4-1 5/16	(1252)	10.04	(0.93)
5650	E	2-5 5/16	(745)	4-7 5/16	(1404)	11.26	(1.05)
5656	E	2-5 5/16	(745)	5-1 5/16	(1557)	12.48	(1.16)
5660	E	2-5 5/16	(745)	5-7 5/16	(1709)	13.70	(1.27)
6020		2-8 5/16	(821)	1-7 5/16	(490)	4.33	(0.40)
6026		2-8 5/16	(821)	2-1 5/16	(642)	5.68	(0.53)
6030	E	2-8 5/16	(821)	2-7 5/16	(795)	7.02	(0.65)
6036	E	2-8 5/16	(821)	3-1 5/16	(947)	8.37	(0.78)
6040	E	2-8 5/16	(821)	3-7 5/16	(1100)	9.72	(0.90)
6046	E	2-8 5/16	(821)	4-1 5/16	(1252)	11.06	(1.03)
6050	E	2-8 5/16	(821)	4-7 5/16	(1404)	12.41	(1.15)
6056	E	2-8 5/16	(821)	5-1 5/16	(1557)	13.76	(1.28)
6060	E	2-8 5/16	(821)	5-7 5/16	(1709)	15.10	(1.40)

NOTE: E= Window that meets the requirements for Egress. Please note that top of the sill must be no more than 44" (1118) *from the floor.*

NOTE: Refer to Product Performance Chapter for International Building Code. Net Clear Opening drawings are pictured with the conversion tables.

Daylight Opening: XO, OX, XX

Clad Ultimate Glider Daylight Measurements OX, XO, XX			Width					
			CN	30		36		40	
			DLO	2-2 9/16	(674)	2-8 9/16	(827)	3-2 9/16	(979)
CN	DLO Height		Square Feet (Square Meters)						
			Standard Bottom Rail						
20	1-4 11/16	(425)		3.08	(0.29)	3.78	(0.35)	4.47	(0.42)
26	1-10 11/16	(577)		4.19	(0.39)	5.13	(0.48)	6.08	(0.56)
30	2-4 11/16	(729)		5.29	(0.49)	6.49	(0.60)	7.69	(0.71)
36	2-10 11/16	(882)		6.40	(0.59)	7.85	(0.73)	9.29	(0.86)
40	3-4 11/16	(1034)		7.51	(0.70)	9.20	(0.85)	10.90	(1.01)
46	3-10 11/16	(1187)		8.61	(0.80)	10.56	(0.98)	12.51	(1.16)
50	4-4 11/16	(1339)		9.72	(0.90)	11.92	(1.11)	14.11	(1.31)
56	4-10 11/16	(1491)		10.82	(1.01)	13.27	(1.23)	15.72	(1.46)
60	5-4 11/16	(1644)		11.93	(1.11)	14.63	(1.36)	17.32	(1.61)
Tall Bottom Rail									
20	1-3 13/16	(402)		2.92	(0.27)	3.58	(0.33)	4.24	(0.39)
26	1-9 13/16	(554)		4.02	(0.37)	4.93	(0.46)	5.84	(0.54)
30	2-3 13/16	(707)		5.13	(0.48)	6.29	(0.58)	7.45	(0.69)
36	2-9 13/16	(859)		6.24	(0.58)	7.65	(0.71)	9.05	(0.84)
40	3-3 13/16	(1012)		7.34	(0.68)	9.00	(0.84)	10.66	(0.99)
46	3-9 13/16	(1164)		8.45	(0.78)	10.36	(0.96)	12.27	(1.14)
50	4-3 13/16	(1316)		9.55	(0.89)	11.71	(1.09)	13.87	(1.29)
56	4-9 13/16	(1469)		10.66	(0.99)	13.07	(1.21)	15.48	(1.44)
60	5-3 13/16	(1621)		11.77	(1.09)	14.43	(1.34)	17.09	(1.59)

Clad Ultimate Glider Daylight Measurements OX, XO, XX			Width							
			CN	46		50		56		60	
			DLO	3-8 9/16	(1132)	4-2 9/16	(1284)	4-8 9/16	(1436)	5-2 9/16	(1589)
CN	DLO Height		Square Feet (Square Meters)								
			Standard Bottom Rail								
20	1-4 11/16	(425)		5.17	(0.48)	5.87	(0.55)	6.56	(0.61)	7.26	(0.67)
26	1-10 11/16	(577)		7.03	(0.65)	7.97	(0.74)	8.92	(0.83)	9.87	(0.92)
30	2-4 11/16	(729)		8.88	(0.83)	10.08	(0.94)	11.28	(1.05)	12.47	(1.16)
36	2-10 11/16	(882)		10.74	(1.00)	12.19	(1.13)	13.63	(1.27)	15.08	(1.40)
40	3-4 11/16	(1034)		12.60	(1.17)	14.29	(1.33)	15.99	(1.49)	17.69	(1.64)
46	3-10 11/16	(1187)		14.45	(1.34)	16.40	(1.52)	18.34	(1.70)	20.29	(1.89)
50	4-4 11/16	(1339)		16.31	(1.52)	18.50	(1.72)	20.70	(1.92)	22.90	(2.13)
56	4-10 11/16	(1491)		18.16	(1.69)	20.61	(1.91)	23.06	(2.14)	25.50	(2.37)
60	5-4 11/16	(1644)		20.02	(1.86)	22.72	(2.11)	25.41	(2.36)	28.11	(2.61)
Tall Bottom Rail											
20	1-3 13/16	(402)		4.90	(0.45)	5.56	(0.52)	6.21	(0.58)	6.87	(0.64)
26	1-9 13/16	(554)		6.75	(0.63)	7.66	(0.71)	8.57	(0.80)	9.48	(0.88)
30	2-3 13/16	(707)		8.61	(0.80)	9.77	(0.91)	10.93	(1.02)	12.09	(1.12)
36	2-9 13/16	(859)		10.46	(0.97)	11.87	(1.10)	13.28	(1.23)	14.69	(1.36)
40	3-3 13/16	(1012)		12.32	(1.14)	13.98	(1.30)	15.64	(1.45)	17.30	(1.61)
46	3-9 13/16	(1164)		14.18	(1.32)	16.09	(1.49)	18.00	(1.67)	19.90	(1.85)
50	4-3 13/16	(1316)		16.03	(1.49)	18.19	(1.69)	20.35	(1.89)	22.51	(2.09)
56	4-9 13/16	(1469)		17.89	(1.66)	20.30	(1.89)	22.71	(2.11)	25.12	(2.33)
60	5-3 13/16	(1621)		19.74	(1.83)	22.40	(2.08)	25.06	(2.33)	27.72	(2.58)

Egress and Vent Openings: XOX

CN	Opening Width		Opening Height		Egress Opening	
	ft - in	mm	ft - in	mm	ft^2	m^2
6020	1-3 1/16	(382)	1-7 5/16	(490)	2.01	(0.19)
6026	1-3 1/16	(382)	2-1 5/16	(642)	2.64	(0.25)
6030	1-3 1/16	(382)	2-7 5/16	(795)	3.27	(0.30)
6036	1-3 1/16	(382)	3-1 5/16	(947)	3.89	(0.36)
6040	1-3 1/16	(382)	3-7 5/16	(1100)	4.52	(0.42)
6046	1-3 1/16	(382)	4-1 5/16	(1252)	5.15	(0.48)
6050	1-3 1/16	(382)	4-7 5/16	(1404)	5.77	(0.54)
6056	1-3 1/16	(382)	5-1 5/16	(1557)	6.40	(0.59)
6060	1-3 1/16	(382)	5-7 5/16	(1709)	7.03	(0.65)
8020	1-9 1/16	(534)	1-7 5/16	(490)	2.82	(0.26)
8026	1-9 1/16	(534)	2-1 5/16	(642)	3.69	(0.34)
8030	1-9 1/16	(534)	2-7 5/16	(795)	4.57	(0.42)
8036	1-9 1/16	(534)	3-1 5/16	(947)	5.45	(0.51)
8040 E	1-9 1/16	(534)	3-7 5/16	(1100)	6.32	(0.59)
8046 E	1-9 1/16	(534)	4-1 5/16	(1252)	7.20	(0.67)
8050 E	1-9 1/16	(534)	4-7 5/16	(1404)	8.08	(0.75)
8056 E	1-9 1/16	(534)	5-1 5/16	(1557)	8.95	(0.83)
8060 E	1-9 1/16	(534)	5-7 5/16	(1709)	9.83	(0.91)
10020	2-3 1/16	(687)	1-7 5/16	(490)	3.62	(0.34)
10026	2-3 1/16	(687)	2-1 5/16	(642)	4.75	(0.44)
10030 E	2-3 1/16	(687)	2-7 5/16	(795)	5.87	(0.55)
10036 E	2-3 1/16	(687)	3-1 5/16	(947)	7.00	(0.65)
10040 E	2-3 1/16	(687)	3-7 5/16	(1100)	8.13	(0.75)
10046 E	2-3 1/16	(687)	4-1 5/16	(1252)	9.25	(0.86)
10050 E	2-3 1/16	(687)	4-7 5/16	(1404)	10.38	(0.96)
10056 E	2-3 1/16	(687)	5-1 5/16	(1557)	11.51	(1.07)
10060 E	2-3 1/16	(687)	5-7 5/16	(1709)	12.63	(1.17)

CN	Opening Vent Width		Opening Vent Height		Vent Opening	
	ft - in	mm	ft - in	mm	ft^2	m^2
6020	2-6 1/16	(764)	1-7 5/16	(490)	4.03	(0.37)
6026	2-6 1/16	(764)	2-1 5/16	(642)	5.28	(0.49)
6030	2-6 1/16	(764)	2-7 5/16	(795)	6.53	(0.61)
6036	2-6 1/16	(764)	3-1 5/16	(947)	7.79	(0.72)
6040	2-6 1/16	(764)	3-7 5/16	(1100)	9.04	(0.84)
6046	2-6 1/16	(764)	4-1 5/16	(1252)	10.29	(0.96)
6050	2-6 1/16	(764)	4-7 5/16	(1404)	11.54	(1.07)
6056	2-6 1/16	(764)	5-1 5/16	(1557)	12.80	(1.19)
6060	2-6 1/16	(764)	5-7 5/16	(1709)	14.05	(1.31)
8020	3-6 1/16	(1069)	1-7 5/16	(490)	5.64	(0.52)
8026	3-6 1/16	(1069)	2-1 5/16	(642)	7.39	(0.69)
8030	3-6 1/16	(1069)	2-7 5/16	(795)	9.14	(0.85)
8036	3-6 1/16	(1069)	3-1 5/16	(947)	10.89	(1.01)
8040	3-6 1/16	(1069)	3-7 5/16	(1100)	12.65	(1.17)
8046	3-6 1/16	(1069)	4-1 5/16	(1252)	14.40	(1.34)
8050	3-6 1/16	(1069)	4-7 5/16	(1404)	16.15	(1.50)
8056	3-6 1/16	(1069)	5-1 5/16	(1557)	17.90	(1.66)
8060	3-6 1/16	(1069)	5-7 5/16	(1709)	19.66	(1.83)
10020	4-6 1/16	(1373)	1-7 5/16	(490)	7.24	(0.67)
10026	4-6 1/16	(1373)	2-1 5/16	(642)	9.50	(0.88)
10030	4-6 1/16	(1373)	2-7 5/16	(795)	11.75	(1.09)
10036	4-6 1/16	(1373)	3-1 5/16	(947)	14.00	(1.30)
10040	4-6 1/16	(1373)	3-7 5/16	(1100)	16.25	(1.51)
10046	4-6 1/16	(1373)	4-1 5/16	(1252)	18.51	(1.72)
10050	4-6 1/16	(1373)	4-7 5/16	(1404)	20.76	(1.93)
10056	4-6 1/16	(1373)	5-1 5/16	(1557)	23.01	(2.14)
10060	4-6 1/16	(1373)	5-7 5/16	(1709)	25.27	(2.35)

NOTE: E= Window that meets the requirements for Egress. Please note that top of the sill must be no more than 44" (1118) *from the floor.*

NOTE: Refer to Product Performance Chapter for International Building Code. Net Clear Opening drawings are pictured with the conversion tables.

Daylight Measurements: XOX

Clad Ultimate Glider Daylight Measurements XOX			Width					
			CN	60		80		100	
			DLO	5-0 1/8	(1527)	7-0 1/8	(2137)	9-0 1/8	(2746)
CN	DLO Height		Square Feet (Square Meters)						
			Standard Bottom Rail						
20	1-4 11/16	(425)		6.98	(0.65)	9.76	(0.91)	12.55	(1.17)
26	1-10 11/16	(577)		9.48	(0.88)	13.27	(1.23)	17.05	(1.58)
30	2-4 11/16	(729)		11.99	(1.11)	16.77	(1.56)	21.56	(2.00)
36	2-10 11/16	(882)		14.49	(1.35)	20.28	(1.88)	26.06	(2.42)
40	3-4 11/16	(1034)		17.00	(1.58)	23.78	(2.21)	30.57	(2.84)
46	3-10 11/16	(1187)		19.50	(1.81)	27.29	(2.54)	35.07	(3.26)
50	4-4 11/16	(1339)		22.01	(2.04)	30.79	(2.86)	39.58	(3.68)
56	4-10 11/16	(1491)		24.51	(2.28)	34.30	(3.19)	44.08	(4.10)
60	5-4 11/16	(1644)		27.02	(2.51)	37.80	(3.51)	48.59	(4.51)
Tall Bottom Rail									
20	1-3 13/16	(402)		6.61	(0.61)	9.24	(0.86)	11.88	(1.10)
26	1-9 13/16	(554)		9.11	(0.85)	12.75	(1.18)	16.39	(1.52)
30	2-3 13/16	(707)		11.62	(1.08)	16.25	(1.51)	20.89	(1.94)
36	2-9 13/16	(859)		14.12	(1.31)	19.76	(1.84)	25.40	(2.36)
40	3-3 13/16	(1012)		16.63	(1.54)	23.26	(2.16)	29.90	(2.78)
46	3-9 13/16	(1164)		19.13	(1.78)	26.77	(2.49)	34.41	(3.20)
50	4-3 13/16	(1316)		21.64	(2.01)	30.27	(2.81)	38.91	(3.61)
56	4-9 13/16	(1469)		24.14	(2.24)	33.78	(3.14)	43.42	(4.03)
60	5-3 13/16	(1621)		26.65	(2.48)	37.28	(3.46)	47.92	(4.45)

Daylight Measurements: Picture Units

Clad Ultimate Glider Picture Daylight Measurements			Width							
			CN	30		36		40		46	
			DLO	2-5	(736)	2-11	(888)	3-5	(1041)	3-11	(1193)
CN	DLO Height		Square Feet (Square Meters) Standard Bottom Rail								
20	1-4 3/4	(425)		3.36	(0.31)	4.06	(0.38)	4.76	(0.44)	5.45	(0.51)
26	1-10 3/4	(577)		4.57	(0.42)	5.52	(0.51)	6.46	(0.60)	7.41	(0.69)
30	2-4 3/4	(729)		5.78	(0.54)	6.97	(0.65)	8.17	(0.76)	9.37	(0.87)
36	2-10 3/4	(882)		6.99	(0.65)	8.43	(0.78)	9.88	(0.92)	11.33	(1.05)
40	3-4 3/4	(1034)		8.19	(0.76)	9.89	(0.92)	11.59	(1.08)	13.28	(1.23)
46	3-10 3/4	(1187)		9.40	(0.87)	11.35	(1.05)	13.29	(1.24)	15.24	(1.42)
50	4-4 3/4	(1339)		10.61	(0.99)	12.80	(1.19)	15.00	(1.39)	17.20	(1.60)
56	4-10 3/4	(1491)		11.82	(1.10)	14.26	(1.32)	16.71	(1.55)	19.15	(1.78)
60	5-4 3/4	(1644)		13.02	(1.21)	15.72	(1.46)	18.42	(1.71)	21.11	(1.96)
			Tall Bottom Rail								
20	1-3 13/16	(402)		3.18	(0.30)	3.84	(0.36)	4.50	(0.42)	5.16	(0.48)
26	1-9 13/16	(554)		4.39	(0.41)	5.30	(0.49)	6.21	(0.58)	7.12	(0.66)
30	2-3 13/16	(706)		5.60	(0.52)	6.76	(0.63)	7.92	(0.74)	9.08	(0.84)
36	2-9 13/16	(859)		6.81	(0.63)	8.22	(0.76)	9.63	(0.89)	11.03	(1.03)
40	3-3 13/16	(1011)		8.01	(0.74)	9.67	(0.90)	11.33	(1.05)	12.99	(1.21)
46	3-9 13/16	(1164)		9.22	(0.86)	11.13	(1.03)	13.04	(1.21)	14.95	(1.39)
50	4-3 13/16	(1316)		10.43	(0.97)	12.59	(1.17)	14.75	(1.37)	16.91	(1.57)
56	4-9 13/16	(1468)		11.64	(1.08)	14.05	(1.30)	16.46	(1.53)	18.86	(1.75)
60	5-3 13/16	(1621)		12.84	(1.19)	15.50	(1.44)	18.16	(1.69)	20.82	(1.93)

Clad Ultimate Glider Picture Daylight Measurements			Width						
			CN	50		56		60	
			DLO	4-5	(1345)	4-11	(1498)	5-5	(1650)
CN	DLO Height		Square Feet (Square Meters) Standard Bottom Rail						
20	1-4 3/4	(425)		6.15	(0.57)	6.85	(0.64)	7.54	(0.70)
26	1-10 3/4	(577)		8.36	(0.78)	9.30	(0.86)	10.25	(0.95)
30	2-4 3/4	(729)		10.56	(0.98)	11.76	(1.09)	12.96	(1.20)
36	2-10 3/4	(882)		12.77	(1.19)	14.22	(1.32)	15.66	(1.46)
40	3-4 3/4	(1034)		14.98	(1.39)	16.68	(1.55)	18.37	(1.71)
46	3-10 3/4	(1187)		17.19	(1.60)	19.13	(1.78)	21.08	(1.96)
50	4-4 3/4	(1339)		19.39	(1.80)	21.59	(2.01)	23.79	(2.21)
56	4-10 3/4	(1491)		21.60	(2.01)	24.05	(2.23)	26.49	(2.46)
60	5-4 3/4	(1644)		23.81	(2.21)	26.51	(2.46)	29.20	(2.71)
			Tall Bottom Rail						
20	1-3 13/16	(402)		5.82	(0.54)	6.48	(0.60)	7.14	(0.66)
26	1-9 13/16	(554)		8.03	(0.75)	8.94	(0.83)	9.85	(0.91)
30	2-3 13/16	(706)		10.24	(0.95)	11.40	(1.06)	12.56	(1.17)
36	2-9 13/16	(859)		12.44	(1.16)	13.85	(1.29)	15.26	(1.42)
40	3-3 13/16	(1011)		14.65	(1.36)	16.31	(1.52)	17.97	(1.67)
46	3-9 13/16	(1164)		16.86	(1.57)	18.77	(1.74)	20.68	(1.92)
50	4-3 13/16	(1316)		19.07	(1.77)	21.23	(1.97)	23.39	(2.17)
56	4-9 13/16	(1468)		21.27	(1.98)	23.68	(2.20)	26.09	(2.42)
60	5-3 13/16	(1621)		23.48	(2.18)	26.14	(2.43)	28.80	(2.68)

Minimum and Maximum Guidelines

Minimum and Maximum Guidelines - Operable Units - OX, XO, XX, XOX											
Unit Type		Min Frame Size					Max Frame Size				
		in	mm	×	in	mm	in	mm	×	in	mm
CUGL	XO, OX, XX	30 1/2	(775)	×	26	(660)	71 1/2	(1816)	×	71 1/2	(1816)
CUGL	XOX	71 1/2	(1816)	×	26	(660)	119 1/2	(3035)	×	71 1/2	(1816)

Minimum and Maximum Guidelines - Picture Unit											
Unit Type		Min Frame Size					Max Frame Size				
		in	mm	×	in	mm	in	mm	×	in	mm
CUGLP	O	14	(356)	×	26	(660)	71 1/2	(1816)	×	71 1/2	(1816)

Certified Sizes and Ratings: XO, OX, XX

Certified Sizes and Ratings - XO, OX												
Unit Type	Frame Height			Frame Width								
				CN	in	mm	CN	in	mm	CN	in	mm
	CN	in	mm	30	35 1/2	(902)	36	41 1/2	(1054)	40	47 1/2	(1207)
CUGL	20	23 1/2	(597)	LC-PG50-HS			LC-PG50-HS			LC-PG50-HS		
	26	29 1/2	(749)	LC-PG50-HS			LC-PG50-HS			LC-PG50-HS		
	30	35 1/2	(902)	LC-PG50-HS			LC-PG50-HS			LC-PG50-HS		
	36	41 1/2	(1054)	LC-PG50-HS			LC-PG50-HS			LC-PG50-HS		
	40	47 1/2	(1207)	LC-PG50-HS			LC-PG50-HS			LC-PG50-HS		
	46	53 1/2	(1359)	LC-PG50-HS			LC-PG50-HS			LC-PG50-HS		
	50	59 1/2	(1511)	LC-PG50-HS			LC-PG50-HS			LC-PG50-HS		
	56	65 1/2	(1664)	LC-PG40-HS			LC-PG40-HS			LC-PG40-HS		
	60	71 1/2	(1816)	LC-PG40-HS			LC-PG40-HS			LC-PG40-HS		

Unit Type	Frame Height			Frame Width											
				CN	in	mm	CN	in	mm	CN	in	mm	CN	in	mm
	CN	in	mm	46	53 1/2	(1359)	50	59 1/2	(1511)	56	65 1/2	(1664)	60	71 1/2	(1816)
CUGL	20	23 1/2	(597)	LC-PG50-HS			LC-PG50-HS			LC-PG50-HS			LC-PG50-HS		
	26	29 1/2	(749)	LC-PG50-HS			LC-PG50-HS			LC-PG50-HS			LC-PG50-HS		
	30	35 1/2	(902)	LC-PG50-HS			LC-PG50-HS			LC-PG50-HS			LC-PG50-HS		
	36	41 1/2	(1054)	LC-PG50-HS			LC-PG50-HS			LC-PG50-HS			LC-PG50-HS		
	40	47 1/2	(1207)	LC-PG50-HS			LC-PG50-HS			LC-PG50-HS			LC-PG50-HS		
	46	53 1/2	(1359)	LC-PG50-HS			LC-PG50-HS			LC-PG50-HS			LC-PG50-HS		
	50	59 1/2	(1511)	LC-PG50-HS			LC-PG50-HS			LC-PG50-HS			LC-PG50-HS		
	56	65 1/2	(1664)	LC-PG40-HS			LC-PG40-HS			LC-PG40-HS			LC-PG40-HS		
	60	71 1/2	(1816)	LC-PG40-HS			LC-PG40-HS			LC-PG40-HS			LC-PG40-HS		

Certified Sizes and Ratings - XX												
Unit Type	Frame Height			Frame Width								
				CN	in	mm	CN	in	mm	CN	in	mm
	CN	in	mm	30	35 1/2	(902)	36	41 1/2	(1054)	40	47 1/2	(1207)
CUGL	20	23 1/2	(597)	LC-PG50-HS			LC-PG50-HS			LC-PG50-HS		
	26	29 1/2	(749)	LC-PG50-HS			LC-PG50-HS			LC-PG50-HS		
	30	35 1/2	(902)	LC-PG50-HS			LC-PG50-HS			LC-PG50-HS		
	36	41 1/2	(1054)	LC-PG50-HS			LC-PG50-HS			LC-PG50-HS		
	40	47 1/2	(1207)	LC-PG50-HS			LC-PG50-HS			LC-PG50-HS		
	46	53 1/2	(1359)	LC-PG50-HS			LC-PG50-HS			LC-PG50-HS		
	50	59 1/2	(1511)	LC-PG35-HS			LC-PG35-HS			LC-PG35-HS		
	56	65 1/2	(1664)	LC-PG35-HS			LC-PG35-HS			LC-PG35-HS		
	60	71 1/2	(1816)	LC-PG35-HS			LC-PG35-HS			LC-PG35-HS		

Unit Type	Frame Height			Frame Width											
				CN	in	mm	CN	in	mm	CN	in	mm	CN	in	mm
	CN	in	mm	46	53 1/2	(1359)	50	59 1/2	(1511)	56	65 1/2	(1664)	60	71 1/2	(1816)
CUGL	20	23 1/2	(597)	LC-PG50-HS			LC-PG50-HS			LC-PG50-HS			LC-PG50-HS		
	26	29 1/2	(749)	LC-PG50-HS			LC-PG50-HS			LC-PG50-HS			LC-PG50-HS		
	30	35 1/2	(902)	LC-PG50-HS			LC-PG50-HS			LC-PG50-HS			LC-PG50-HS		
	36	41 1/2	(1054)	LC-PG50-HS			LC-PG50-HS			LC-PG50-HS			LC-PG50-HS		
	40	47 1/2	(1207)	LC-PG50-HS			LC-PG50-HS			LC-PG50-HS			LC-PG50-HS		
	46	53 1/2	(1359)	LC-PG50-HS			LC-PG50-HS			LC-PG50-HS			LC-PG50-HS		
	50	59 1/2	(1511)	LC-PG35-HS			LC-PG35-HS			LC-PG35-HS			LC-PG35-HS		
	56	65 1/2	(1664)	LC-PG35-HS			LC-PG35-HS			LC-PG35-HS			LC-PG35-HS		
	60	71 1/2	(1816)	LC-PG35-HS			LC-PG35-HS			LC-PG35-HS			LC-PG35-HS		

Certified Sizes and Rating: Picture and XOX

Certified Sizes and Ratings - O												
Unit Type	Frame Height			Frame Width								
				CN	in	mm	CN	in	mm	CN	in	mm
	CN	in	mm	30	35 1/2	(902)	36	41 1/2	(1054)	40	47 1/2	(1207)
CUGL	20	23 1/2	(597)	LC-PG40-FW			LC-PG40-FW			LC-PG40-FW		
	26	29 1/2	(749)	LC-PG40-FW			LC-PG40-FW			LC-PG40-FW		
	30	35 1/2	(902)	LC-PG40-FW			LC-PG40-FW			LC-PG40-FW		
	36	41 1/2	(1054)	LC-PG40-FW			LC-PG40-FW			LC-PG40-FW		
	40	47 1/2	(1207)	LC-PG40-FW			LC-PG40-FW			LC-PG40-FW		
	46	53 1/2	(1359)	LC-PG40-FW			LC-PG40-FW			LC-PG40-FW		
	50	59 1/2	(1511)	LC-PG40-FW			LC-PG40-FW			LC-PG40-FW		
	56	65 1/2	(1664)	LC-PG40-FW			LC-PG40-FW			LC-PG40-FW		
	60	71 1/2	(1816)	LC-PG40-FW			LC-PG40-FW			LC-PG40-FW		

Unit Type	Frame Height			Frame Width											
				CN	in	mm	CN	in	mm	CN	in	mm	CN	in	mm
	CN	in	mm	46	53 1/2	(1359)	50	59 1/2	(1511)	56	65 1/2	(1664)	60	71 1/2	(1816)
CUGL	20	23 1/2	(597)	LC-PG40-FW			LC-PG40-FW			LC-PG40-FW			LC-PG40-FW		
	26	29 1/2	(749)	LC-PG40-FW			LC-PG40-FW			LC-PG40-FW			LC-PG40-FW		
	30	35 1/2	(902)	LC-PG40-FW			LC-PG40-FW			LC-PG40-FW			LC-PG40-FW		
	36	41 1/2	(1054)	LC-PG40-FW			LC-PG40-FW			LC-PG40-FW			LC-PG40-FW		
	40	47 1/2	(1207)	LC-PG40-FW			LC-PG40-FW			LC-PG40-FW			LC-PG40-FW		
	46	53 1/2	(1359)	LC-PG40-FW			LC-PG40-FW			LC-PG40-FW			LC-PG40-FW		
	50	59 1/2	(1511)	LC-PG40-FW			LC-PG40-FW			LC-PG40-FW			LC-PG40-FW		
	56	65 1/2	(1664)	LC-PG40-FW			LC-PG40-FW			LC-PG40-FW			LC-PG40-FW		
	60	71 1/2	(1816)	LC-PG40-FW			LC-PG40-FW			LC-PG40-FW			LC-PG40-FW		

Certified Sizes and Ratings - XOX												
Unit Type	Frame Height			Frame Width								
				CN	in	mm	CN	in	mm	CN	in	mm
	CN	in	mm	60	71 1/2	(1816)	80	95 1/2	(2426)	100	119 1/2	(3035)
CUGL	20	23 1/2	(597)	LC-PG35-HS			LC-PG35-HS			LC-PG35-HS		
	26	29 1/2	(749)	LC-PG35-HS			LC-PG35-HS			LC-PG35-HS		
	30	35 1/2	(902)	LC-PG35-HS			LC-PG35-HS			LC-PG35-HS		
	36	41 1/2	(1054)	LC-PG35-HS			LC-PG35-HS			LC-PG35-HS		
	40	47 1/2	(1207)	LC-PG35-HS			LC-PG35-HS			LC-PG35-HS		
	46	53 1/2	(1359)	LC-PG35-HS			LC-PG35-HS			LC-PG35-HS		
	50	59 1/2	(1511)	LC-PG35-HS			LC-PG35-HS			LC-PG35-HS		
	56	65 1/2	(1664)	LC-PG35-HS			LC-PG35-HS			LC-PG35-HS		
	60	71 1/2	(1816)	LC-PG35-HS			LC-PG35-HS			LC-PG35-HS		

Measurement Conversions: XO, OX, XX

Unit Measurements		Width OX, XO, XX			Height	
From	To					
Rough Opening			**in**	**mm**	**in**	**mm**
OM of Frame	Rough Opening		+ 1	(25)	+ 1/2	(13)
Masonry Opening	Rough Opening		+ 1/2	(13)	+ 1/4	(06)
Masonry Opening w/BMC	Rough Opening		-2 1/8	(54)	-1 11/16	(43)
Masonry Opening w/Flat Casing	Rough Opening		-5 1/2	(140)	-3 3/8	(86)
Sash			**in**	**mm**	**in**	**mm**
OM of Frame	OM of Primary Sash	÷ 2	-1/2	(13)	-3 1/4	(83)
OM of Frame	OM of Secondary Sash	÷ 2	-17/32	(13)	-3 1/4	(83)
Daylight Opening	OM of Primary Sash		+ 3 31/32	(101)	+ 3 17/32	(90)
Daylight Opening	OM of Secondary Sash		+ 3 15/16	(100)	+ 3 17/32	(90)
Glass			**in**	**mm**	**in**	**mm**
Daylight Opening	Glass		+ 1 1/16	(27)	+ 1 1/16	(27)
Primary Full Screen (Dual)			**in**	**mm**	**in**	**mm**
OM of Frame	OM of Screen Frame	÷ 2	-19/32	(15)	-2 1/4	(58)
Daylight Opening	OM of Screen Frame		+ 3 7/8	(98)	+ 4 17/32	(115)
Secondary Full Screen (Dual)			**in**	**mm**	**in**	**mm**
OM of Frame	OM of Screen Frame	÷ 2	-19/32	(15)	-2 1/4	(58)
Daylight Opening	OM of Screen Frame		+ 3 7/8	(98)	+ 4 17/32	(115)
Active 1/2 Screen			**in**	**mm**	**in**	**mm**
OM of Frame	OM of Screen Frame	÷ 2	-19/32	(15)	-2 1/4	(58)
Daylight Opening	OM of Screen Frame		+ 3 7/8	(98)	+ 4 17/32	(115)
Combo			**in**	**mm**	**in**	**mm**
OM of Frame	OM of Combo Frame		-2 1/8	(54)	-2 5/32	(55)
Daylight Opening	OM of Combo Frame	× 2	+ 6 15/16	(176)	+ 4 5/8	(118)

Measurement Conversions: XOX and Picture

Unit Measurements		Width XOX			Height	
From	To					
Rough Opening			**in**	**mm**	**in**	**mm**
OM of Frame	Rough Opening		+ 1	(25)	+ 1/2	(13)
Masonry Opening	Rough Opening		+ 1/2	(13)	+ 1/4	(06)
Masonry Opening w/BMC	Rough Opening		-2 1/8	(54)	-1 11/16	(43)
Masonry Opening w/Flat Casing	Rough Opening		-5 1/2	(140)	-3 3/8	(86)
Sash			**in**	**mm**	**in**	**mm**
OM of Frame	OM of Primary Sash	÷ 4	-5/8	(16)	-3 1/4	(83)
OM of Frame	OM of Secondary Sash	÷ 2	+ 2 3/16	(55)	-3 1/4	(83)
Daylight Opening	OM of Primary Sash		+ 3 31/32	(101)	+ 3 17/32	(90)
Daylight Opening	OM of Secondary Sash		+ 4 3/8	(111)	+ 3 17/32	(90)
Glass			**in**	**mm**	**in**	**mm**
Daylight Opening	Glass		+ 1 1/16	(27)	+ 1 1/16	(27)
Active 1/2 Screen			**in**	**mm**	**in**	**mm**
Daylight Opening	OM of Screen Frame		+ 3 7/8	(98)	+ 4 17/32	(115)
Combo			**in**	**mm**	**in**	**mm**
OM of Frame	OM of Combo Frame		-2 1/32	(51)	-2 5/32	(55)
Daylight Opening	OM of Combo Frame	× 4	+ 16 3/8	(416)	+ 4 5/8	(118)

Unit Measurements		Width O		Height	
From	To				
Rough Opening		**in**	**mm**	**in**	**mm**
OM of Frame	Rough Opening	+ 1	(25)	+ 1/2	(13)
Masonry Opening	Rough Opening	+ 1/2	(13)	+ 1/4	(06)
Masonry Opening w/BMC	Rough Opening	-2 1/8	(54)	-1 11/16	(43)
Masonry Opening w/Flat Casing	Rough Opening	-5 1/2	(140)	-3 3/8	(86)
Sash		**in**	**mm**	**in**	**mm**
OM of Frame	OM of Sash	-3	(76)	-3 1/4	(83)
Daylight Opening	OM of Sash	+ 3 17/32	(90)	+ 3 17/32	(90)
Glass		**in**	**mm**	**in**	**mm**
Daylight Opening	Glass	+ 1 1/16	(27)	+ 1 1/16	(27)

Measurement Conversions

Clear Opening: XO, OX, XX

Clear Opening Width = (Frame OM Width / 2) - 3 7/16" (87)

Clear Opening Height = Frame OSM Height - 4 7/32" (107)

Clear Opening Area (ft. ^2) = (Clear Opening Width x Clear Opening Height) / 144

Clear Opening: XOX (1/4, 1/2, 1/4)

Vent Opening Width = (Frame OM Width / 4) - 2 27/32" (72)

Vent Opening:

Vent Opening Width = Daylight Opening Width of the operating sash + 1 1/32"(26)

Vent Opening Height = Daylight Opening Height of the operating sash (standard bottom rail unit) + 2 9/16 (65)

Vent Opening Height = Daylight Opening Height of the operating sash (tall bottom rail unit) + 3 7/16" (87)

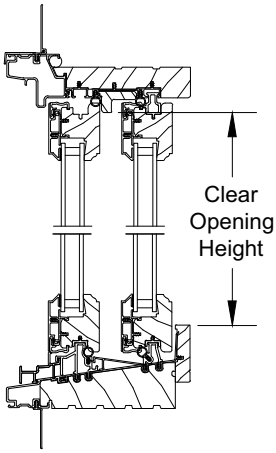

Head Jamb and Sill

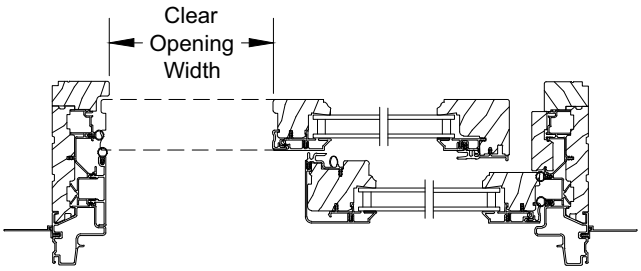

XO Jambs

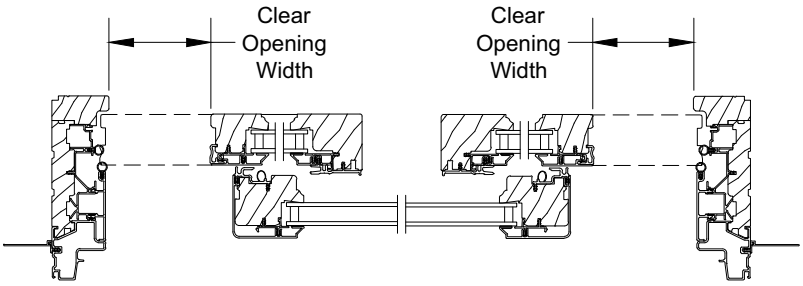

XOX Jambs

Standard Unit Measurements: XO, OX, XX, XOX

Standard Glider Unit Measurements - XO, OX, XX								
Width								
CN	Masonry Opening		Rough Opening		Frame Size		Daylight Opening	
	ft - in	mm	ft - in	mm	ft - in	mm	ft - in	mm
30	3-0	(914)	3-0 1/2	(927)	2-11 1/2	(902)	2-2 9/16	(674)
36	3-6	(1067)	3-6 1/2	(1080)	3-5 1/2	(1054)	2-8 9/16	(827)
40	4-0	(1219)	4-0 1/2	(1232)	3-11 1/2	(1207)	3-2 9/16	(979)
46	4-6	(1372)	4-6 1/2	(1384)	4-5 1/2	(1359)	3-8 9/16	(1132)
50	5-0	(1524)	5-0 1/2	(1537)	4-11 1/2	(1511)	4-2 9/16	(1284)
56	5-6	(1676)	5-6 1/2	(1689)	5-5 1/2	(1664)	4-8 9/16	(1436)
60	6-0	(1829)	6-0 1/2	(1842)	5-11 1/2	(1816)	5-2 9/16	(1589)

Standard Glider Unit Measurements - XO, OX, XX										
Height										
CN	Masonry Opening		Rough Opening		Frame Size		Daylight Opening (Standard Bottom Rail)		Daylight Opening (Tall Bottom Rail)	
	ft - in	mm	ft - in	mm	ft - in	mm	ft - in	mm	ft - in	mm
20	1-11 3/4	(603)	2-0	(610)	1-11 1/2	(597)	1-4 11/16	(425)	1-3 13/16	(402)
26	2-5 3/4	(756)	2-6	(762)	2-5 1/2	(749)	1-10 11/16	(577)	1-9 13/16	(554)
30	2-11 3/4	(908)	3-0	(914)	2-11 1/2	(902)	2-4 11/16	(729)	2-3 13/16	(707)
36	3-5 3/4	(1060)	3-6	(1067)	3-5 1/2	(1054)	2-10 11/16	(882)	2-9 13/16	(859)
40	3-11 3/4	(1213)	4-0	(1219)	3-11 1/2	(1207)	3-4 11/16	(1034)	3-3 13/16	(1012)
46	4-5 3/4	(1365)	4-6	(1372)	4-5 1/2	(1359)	3-10 11/16	(1187)	3-9 13/16	(1164)
50	4-11 3/4	(1518)	5-0	(1524)	4-11 1/2	(1511)	4-4 11/16	(1339)	4-3 13/16	(1316)
56	5-5 3/4	(1670)	5-6	(1676)	5-5 1/2	(1664)	4-10 11/16	(1491)	4-9 13/16	(1469)
60	5-11 3/4	(1822)	6-0	(1829)	5-11 1/2	(1816)	5-4 11/16	(1644)	5-3 13/16	(1621)

Standard Glider Unit Measurements - XOX								
Width								
CN	Masonry Opening		Rough Opening		Frame Size		Daylight Opening	
	ft - in	mm	ft - in	mm	ft - in	mm	ft - in	mm
60	6-0	(1829)	6-0 1/2	(1842)	5-11 1/2	(1816)	5-0 1/8	(1527)
80	8-0	(2438)	8-0 1/2	(2451)	7-11 1/2	(2426)	7-0 1/8	(2137)
100	10-0	(3048)	10-0 1/2	(3061)	9-11 1/2	(3035)	9-0 1/8	(2746)

Standard Glider Unit Measurements - XOX										
Height										
CN	Masonry Opening		Rough Opening		Frame Size		Daylight Opening (Std Bottom Rail)		Daylight Opening (Tall Bottom Rail)	
	ft - in	mm	ft - in	mm	ft - in	mm	ft - in	mm	ft - in	mm
20	1-11 3/4	(603)	2-0	(610)	1-11 1/2	(597)	1-4 11/16	(425)	1-3 13/16	(402)
26	2-5 3/4	(756)	2-6	(762)	2-5 1/2	(749)	1-10 11/16	(577)	1-9 13/16	(554)
30	2-11 3/4	(908)	3-0	(914)	2-11 1/2	(902)	2-4 11/16	(729)	2-3 13/16	(707)
36	3-5 3/4	(1060)	3-6	(1067)	3-5 1/2	(1054)	2-10 11/16	(882)	2-9 13/16	(859)
40	3-11 3/4	(1213)	4-0	(1219)	3-11 1/2	(1207)	3-4 11/16	(1034)	3-3 13/16	(1012)
46	4-5 3/4	(1365)	4-6	(1372)	4-5 1/2	(1359)	3-10 11/16	(1187)	3-9 13/16	(1164)
50	4-11 3/4	(1518)	5-0	(1524)	4-11 1/2	(1511)	4-4 11/16	(1339)	4-3 13/16	(1316)
56	5-5 3/4	(1670)	5-6	(1676)	5-5 1/2	(1664)	4-10 11/16	(1491)	4-9 13/16	(1469)
60	5-11 3/4	(1822)	6-0	(1829)	5-11 1/2	(1816)	5-4 11/16	(1644)	5-3 13/16	(1621)

Standard Unit Measurements: Picture

Standard Glider Unit Measurements - O								
Width								
CN	Masonry Opening		Rough Opening		Frame Size		Daylight Opening	
	ft - in	mm	ft - in	mm	ft - in	mm	ft - in	mm
30	3-0	(914)	3-0 1/2	(927)	2-11 1/2	(902)	2-5	(736)
36	3-6	(1067)	3-6 1/2	(1080)	3-5 1/2	(1054)	2-11	(888)
40	4-0	(1219)	4-0 1/2	(1232)	3-11 1/2	(1207)	3-5	(1041)
46	4-6	(1372)	4-6 1/2	(1384)	4-5 1/2	(1359)	3-11	(1193)
50	5-0	(1524)	5-0 1/2	(1537)	4-11 1/2	(1511)	4-5	(1345)
56	5-6	(1676)	5-6 1/2	(1689)	5-5 1/2	(1664)	4-5	(1345)
60	6-0	(1829)	6-0 1/2	(1842)	5-11 1/2	(1816)	4-5	(1345)

Standard Glider Unit Measurements - O										
Height										
CN	Masonry Opening		Rough Opening		Frame Size		Daylight Opening (Std Bottom Rail)		Daylight Opening (Tall Bottom Rail)	
	ft - in	mm	ft - in	mm	ft - in	mm	ft - in	mm	ft - in	mm
20	1-11 3/4	(603)	2-0	(610)	1-11 1/2	(597)	1-4 3/4	(425)	1-3 13/16	(402)
26	2-5 3/4	(756)	2-6	(762)	2-5 1/2	(749)	1-10 3/4	(577)	1-9 13/16	(554)
30	2-11 3/4	(908)	3-0	(914)	2-11 1/2	(902)	2-4 3/4	(729)	2-3 13/16	(706)
36	3-5 3/4	(1060)	3-6	(1067)	3-5 1/2	(1054)	2-10 3/4	(882)	2-9 13/16	(859)
40	3-11 3/4	(1213)	4-0	(1219)	3-11 1/2	(1207)	3-4 3/4	(1034)	3-3 13/16	(1011)
46	4-5 3/4	(1365)	4-6	(1372)	4-5 1/2	(1359)	3-10 3/4	(1187)	3-9 13/16	(1164)
50	4-11 3/4	(1518)	5-0	(1524)	4-11 1/2	(1511)	4-4 3/4	(1339)	4-3 13/16	(1316)
56	5-5 3/4	(1670)	5-6	(1676)	5-5 1/2	(1664)	4-10 3/4	(1491)	4-9 13/16	(1468)
60	5-11 3/4	(1822)	6-0	(1829)	5-11 1/2	(1816)	5-4 3/4	(1644)	5-3 13/16	(1621)

Section Details: Operating/Triple Sash

Scale: 3" = 1' 0"

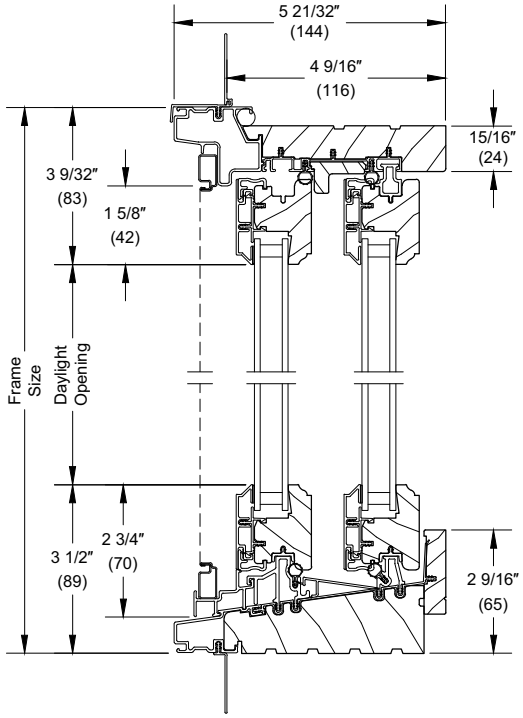

Head Jamb and Sill

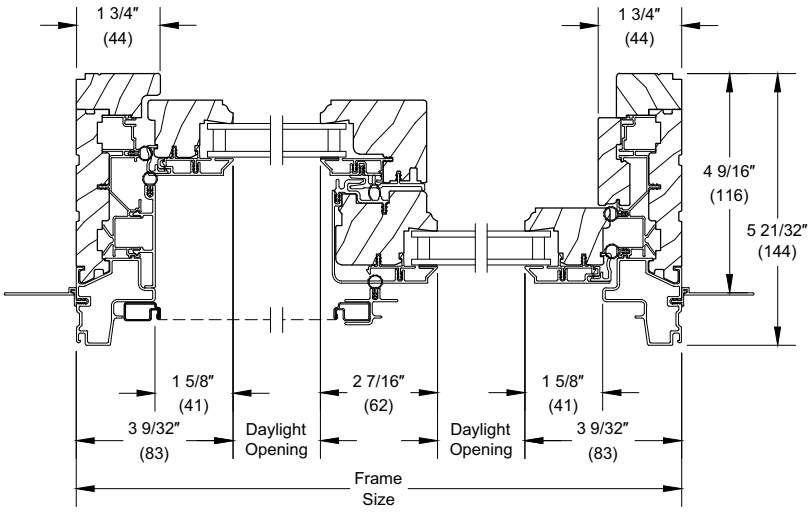

XO Jambs

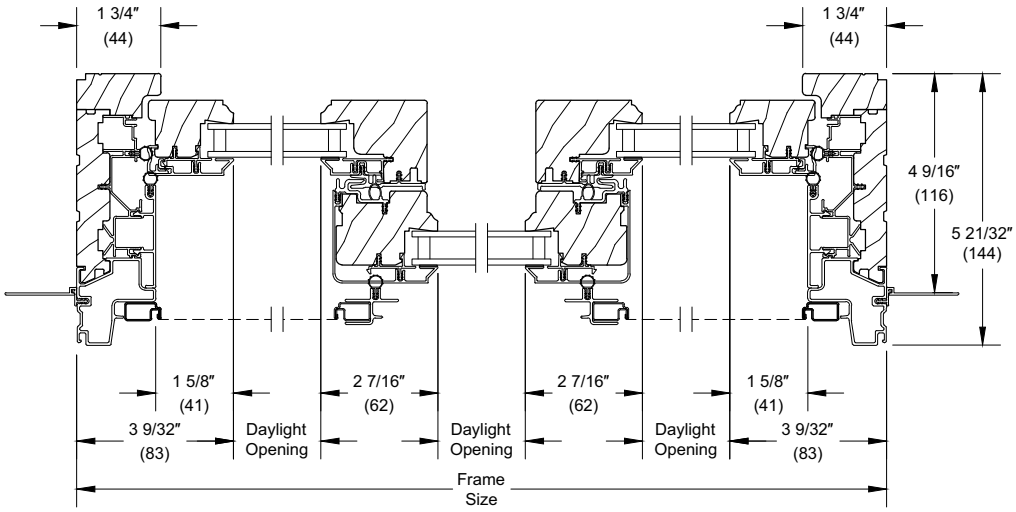

XOX Jambs

Section Details: Picture and Casing Options

Scale: 3" = 1' 0"

Picture

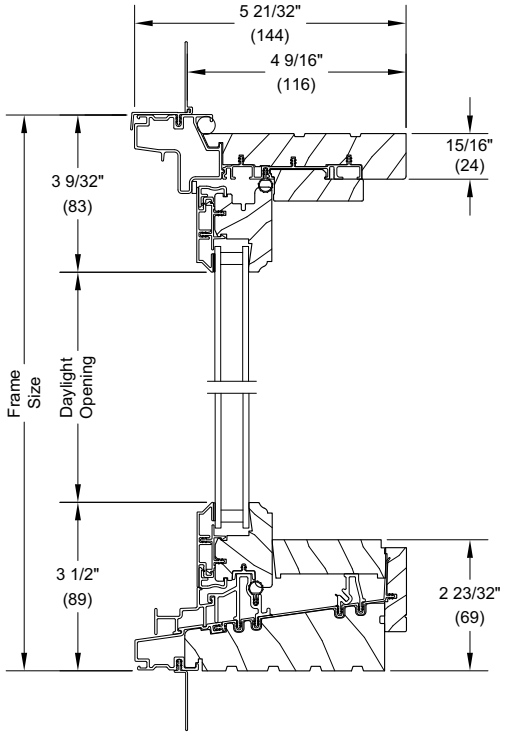

Head Jamb and Sill

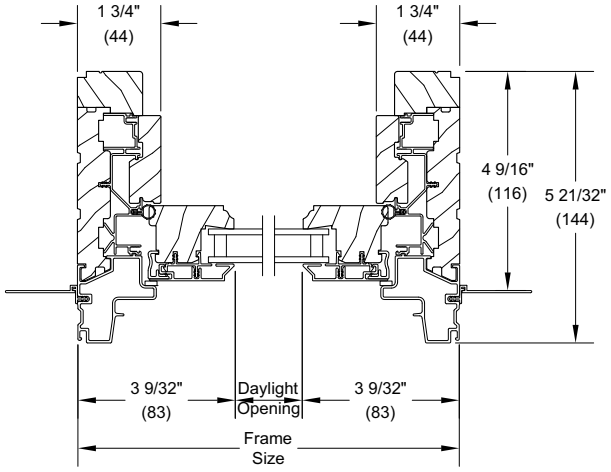

Jambs

Casing Options

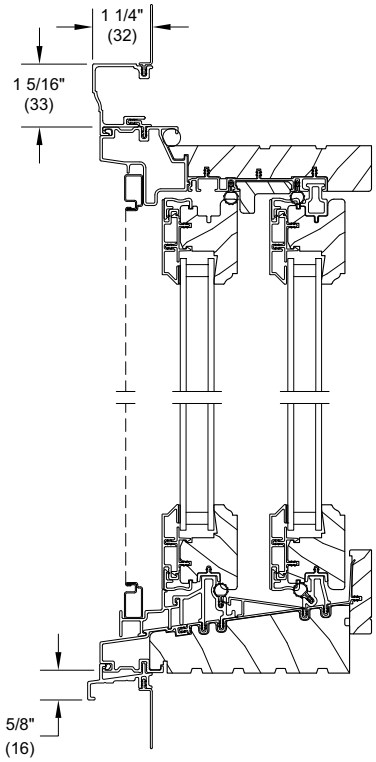

Head Jamb and Sill with Clad Brick Mould Casing

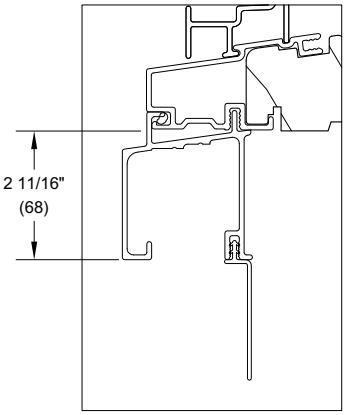

Sill with 2" (51) extruded subsill

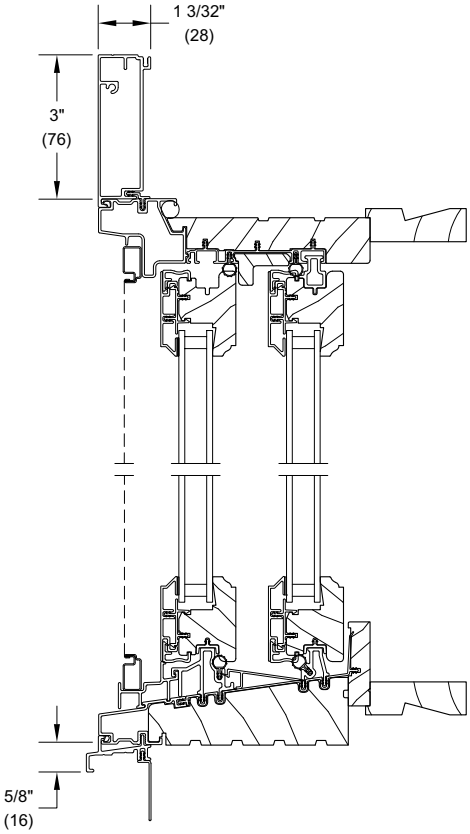

Clad Flat Casing

Section Details: Mullions

Scale: 3" = 1' 0"

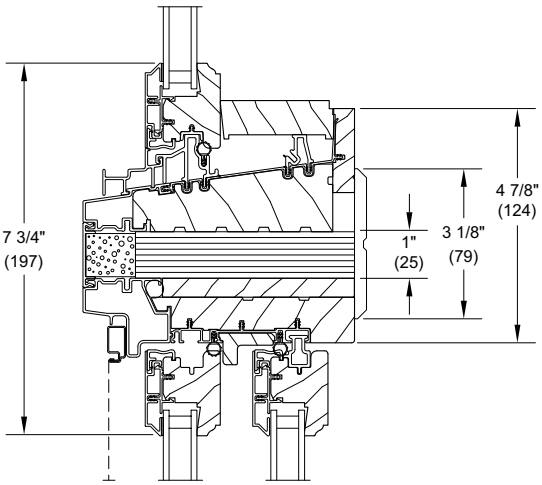

Horizontal Mullion - Picture/Operator

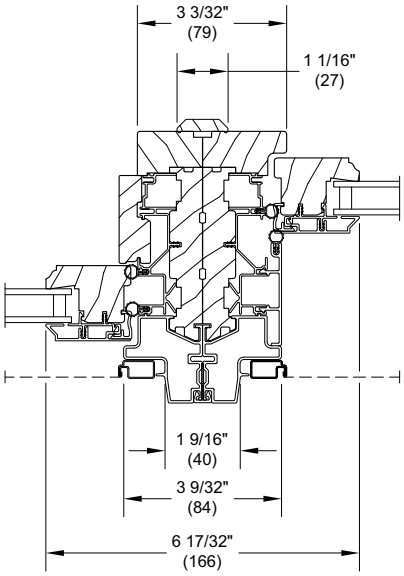

Vertical Mullion-Operator/Operator

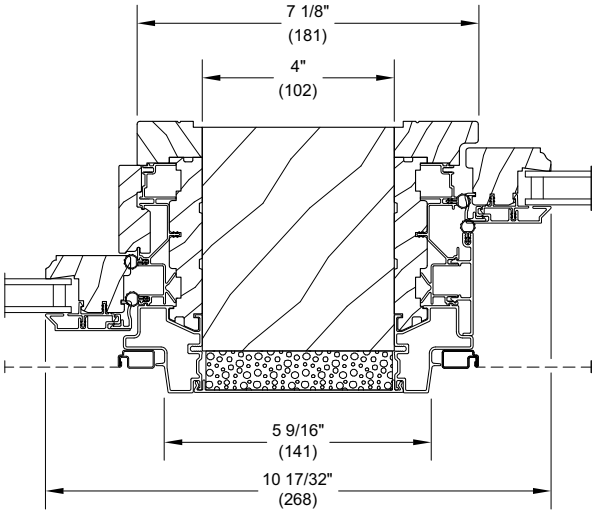

Horizontal Mullion - 4" Space Mull

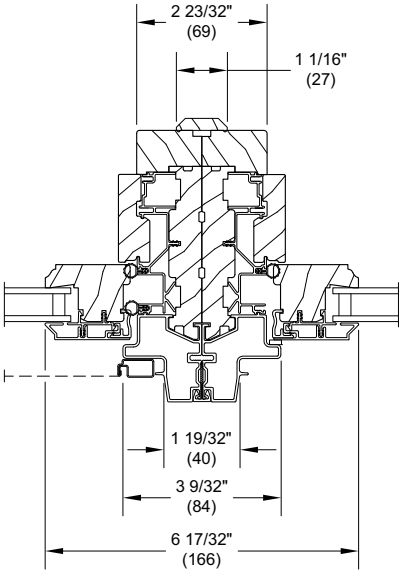

Vertical Mullion-Operator/Picture