Clad Ultimate Double Hung Round Top

Unit Features 1
Minimum and Maximum Guidelines/Certified Sizes and Ratings 2
Measurement Conversions 3
Egress and Vent Openings: Standard Sill Liner 4
Egress and Vent Openings: High Performance Sill Liner 5
Standard Unit Measurements: RT2 6
Standard Unit Measurements: RT6 - Eyebrow Above Springline 7
Section Details: Ultimate Single Hung Round Top - Operating 9
Section Details: Ultimate Double Hung Round Top - Operating 10
Section Details: Transom and Picture 11
Section Details: Casing Options 12

Unit Features

Clad Ultimate Round Top Double Hung: CUDHRT

Clad Ultimate Round Top Single Hung: CUSHRT

Clad Ultimate Round Top Double Hung Picture: CUDHPRT

Clad Ultimate Round Top Double Hung Transom: CUDHTRT

Operating Hardware:

- Balance system: Coil spring block and tackle with nylon cord and fiber filled nylon clutch.
- Jamb carrier: Vinyl extrusion with wood and aluminum insert. Color: Beige
- Lock: High pressure zinc die-cast cam lock and keeper.
  - Color: Satin Taupe with optional colors: White, Brass, Satin Chrome, Antique Brass, Bronze, Oil Rubbed Bronze, Satin Nickel
- Optional window opening control device

Optional Glass

- 1” Tri−pane LoĒ-180™ outer piece and LoĒ-180™ inner piece with Argon
- 1″ Tri−pane LoĒ-180™ outer piece and LoĒ-180™ inner piece with Krypton/Argon
- 1″ Tri−pane LoĒ^2-272® outer piece and LoĒ^2-272® inner piece with Argon
- 1″ Tri−pane LoĒ^2-272® outer piece and LoĒ^2-272® inner piece with Krypton/Argon
- 1″ Tri−pane LoĒ^3-366® outer piece and LoĒ-180™ inner piece with Argon
- 1″ Tri−pane LoĒ^3-366® outer piece and LoĒ-180™ inner piece with Krypton/Argon

Minimum and Maximum Guidelines/Certified Sizes and Ratings

Minimum and Maximum Rough Opening Guidelines										
Unit Type	Width		x	Height		Width		x	Height	
	in	mm	×	in	mm	in	mm	×	in	mm
CUDH RT	13 3/8	(340)	×	24 3/8	(619)	45 3/8	(1153)	×	88	(2235)
CUDHT RT	13 3/8	(340)	×	14 3/16	(360)	75	(1905)	×	90	(2286)
CUDHP RT	13 3/8	(340)	×	25 3/8	(645)	75	(1905)	×	90	(2286)

Certified Sizes and Ratings						
Unit Type	Frame Height		Frame Width			
			in	mm	in	mm
	in	mm	35 5/16	(897)	45 3/8	(1153)
CUDH RT	67 7/16	(1713)	H-LC40		H-LC40	
	80 1/2	(2045)	H-LC40		H-LC40	
	87 7/16	(2221)	N/A		H-LC30	

Certified Sizes and Ratings				
Unit Type	Frame Height		Frame Width	
			in	mm
	in	mm	74 3/4	(1899)
CUDHT RT	89 1/4	(2267)	FW-C40	

Certified Sizes and Ratings				
Unit Type	Frame Height		Frame Width	
			in	mm
	in	mm	74 3/4	(1899)
CUDHP RT	89 1/4	(2267)	FW-C40	

Measurement Conversions

Scale: 1 1/2" = 1' 0"

Double Hung Round Top Operating Unit						
Unit Measurements		Width		Height		
From	To					
Rough Opening		**in**	**mm**		**in**	**mm**
OM of Frame	Rough Opening	+ 1	(25)		+ 1/2	(13)
Masonry Opening w/out BMC	Rough Opening	+ 1/2	(13)		+ 1/4	(06)
Masonry Opening w/BMC	Rough Opening	-2 1/8	(54)		-1 1/16	(27)
Masonry Opening w/Flat Casing	Rough Opening	-6 1/2	(165)		-3 7/8	(98)
Top Sash		**in**	**mm**		**in**	**mm**
OM of Frame	OM of Top Sash	-2 29/32	(74)	÷ 2	-1 5/16	(33)
Bottom Sash		**in**	**mm**		**in**	**mm**
OM of Frame	OM of Bottom Sash	-2 29/32	(74)	÷ 2	+ 7/16	(11)
Glass		**in**	**mm**		**in**	**mm**
Daylight Opening	Glass	+ 1 1/16	(27)		+ 1 1/16	(27)
Screen		**in**	**mm**		**in**	**mm**
OM of Frame	OM of Screen	-2 1/16	(52)		-1 7/8	(48)
Daylight Opening	OM of Screen	+ 4 3/8	(111)	× 2	+ 8 5/8	(219)
Half Screen		**in**	**mm**		**in**	**mm**
OM of Frame	OM of Screen	-2 1/16	(52)	÷ 2	-3/16	(05)
Daylight Opening	OM of Screen	+ 4 3/8	(111)		+ 5 1/16	(129)

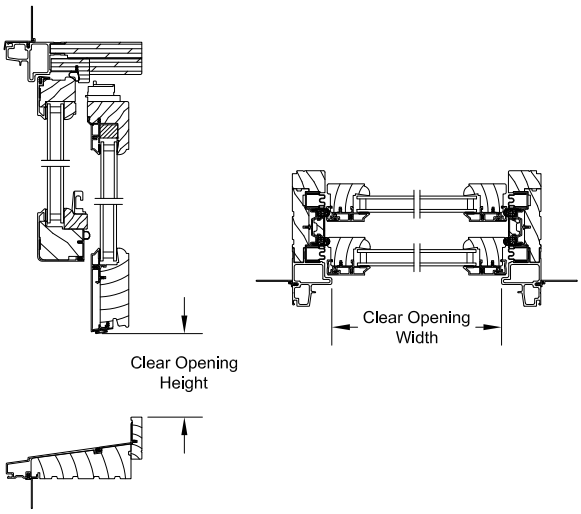

Egress and Vent Openings: Standard Sill Liner

CN		Opening Width		Opening Height Std. Sill Liner		Egress Opening	
		ft - in	mm	ft - in	mm	ft^2	m^2
2014		1-10 1/8	(561)	1-1 15/16	(354)	2.14	(0.20)
2016		1-10 1/8	(561)	1-3 15/16	(405)	2.44	(0.23)
2018		1-10 1/8	(561)	1-5 15/16	(456)	2.75	(0.26)
2020		1-10 1/8	(561)	1-7 15/16	(506)	3.06	(0.28)
2022		1-10 1/8	(561)	1-9 15/16	(557)	3.37	(0.31)
2024		1-10 1/8	(561)	1-11 15/16	(608)	3.67	(0.34)
2026		1-10 1/8	(561)	2-1 15/16	(659)	3.98	(0.37)
2028		1-10 1/8	(561)	2-3 15/16	(710)	4.29	(0.40)
2030		1-10 1/8	(561)	2-5 15/16	(760)	4.59	(0.43)
2032		1-10 1/8	(561)	2-7 15/16	(811)	4.90	(0.46)
2034		1-10 1/8	(561)	2-9 15/16	(862)	5.21	(0.48)
2036		1-10 1/8	(561)	2-11 15/16	(913)	5.51	(0.51)
2414		2-2 1/8	(663)	1-2 11/16	(372)	2.65	(0.25)
2416		2-2 1/8	(663)	1-4 11/16	(423)	3.01	(0.28)
2418		2-2 1/8	(663)	1-6 11/16	(474)	3.38	(0.31)
2420		2-2 1/8	(663)	1-8 11/16	(524)	3.74	(0.35)
2422		2-2 1/8	(663)	1-10 11/16	(575)	4.10	(0.38)
2424		2-2 1/8	(663)	2-0 11/16	(626)	4.46	(0.41)
2426		2-2 1/8	(663)	2-2 11/16	(677)	4.83	(0.45)
2428		2-2 1/8	(663)	2-4 11/16	(728)	5.19	(0.48)
2430		2-2 1/8	(663)	2-6 11/16	(778)	5.55	(0.52)
2432	E	2-2 1/8	(663)	2-8 11/16	(829)	5.91	(0.55)
2434	E	2-2 1/8	(663)	2-10 11/16	(880)	6.28	(0.58)
2436	E	2-2 1/8	(663)	3-0 11/16	(931)	6.64	(0.62)
2814		2-6 1/8	(764)	1-2 11/16	(372)	3.06	(0.28)
2816		2-6 1/8	(764)	1-4 11/16	(423)	3.48	(0.32)
2818		2-6 1/8	(764)	1-6 11/16	(474)	3.90	(0.36)
2820		2-6 1/8	(764)	1-8 11/16	(524)	4.31	(0.40)
2822		2-6 1/8	(764)	1-10 11/16	(575)	4.73	(0.44)
2824		2-6 1/8	(764)	2-0 11/16	(626)	5.15	(0.48)
2826		2-6 1/8	(764)	2-2 11/16	(677)	5.57	(0.52)
2828	E	2-6 1/8	(764)	2-4 11/16	(728)	5.98	(0.56)
2830	E	2-6 1/8	(764)	2-6 11/16	(778)	6.40	(0.59)
2832	E	2-6 1/8	(764)	2-8 11/16	(829)	6.82	(0.63)
2834	E	2-6 1/8	(764)	2-10 11/16	(880)	7.24	(0.67)
2836	E	2-6 1/8	(764)	3-0 11/16	(931)	7.66	(0.71)

CN		Opening Width		Opening Height Std. Sill Liner		Egress Opening	
		ft - in	mm	ft - in	mm	ft^2	m^2
3214		2-10 1/8	(866)	1-2 7/16	(367)	3.42	(0.32)
3216		2-10 1/8	(866)	1-4 7/16	(418)	3.89	(0.36)
3218		2-10 1/8	(866)	1-6 7/16	(468)	4.36	(0.41)
3220		2-10 1/8	(866)	1-8 7/16	(519)	4.84	(0.45)
3222		2-10 1/8	(866)	1-10 7/16	(570)	5.31	(0.49)
3224	E	2-10 1/8	(866)	2-0 7/16	(621)	5.79	(0.54)
3226	E	2-10 1/8	(866)	2-2 7/16	(672)	6.26	(0.58)
3228	E	2-10 1/8	(866)	2-4 7/16	(722)	6.73	(0.63)
3230	E	2-10 1/8	(866)	2-6 7/16	(773)	7.21	(0.67)
3232	E	2-10 1/8	(866)	2-8 7/16	(824)	7.68	(0.71)
3234	E	2-10 1/8	(866)	2-10 7/16	(875)	8.15	(0.76)
3236	E	2-10 1/8	(866)	3-0 7/16	(926)	8.63	(0.80)
3614		3-2 1/8	(967)	1-3 1/16	(381)	3.97	(0.37)
3616		3-2 1/8	(967)	1-5 1/16	(432)	4.50	(0.42)
3618		3-2 1/8	(967)	1-7 1/16	(483)	5.03	(0.47)
3620		3-2 1/8	(967)	1-9 1/16	(534)	5.56	(0.52)
3622		3-2 1/8	(967)	1-11 1/16	(585)	6.09	(0.57)
3624	E	3-2 1/8	(967)	2-1 1/16	(635)	6.62	(0.61)
3626	E	3-2 1/8	(967)	2-3 1/16	(686)	7.15	(0.66)
3628	E	3-2 1/8	(967)	2-5 1/16	(737)	7.67	(0.71)
3630	E	3-2 1/8	(967)	2-7 1/16	(788)	8.20	(0.76)
3632	E	3-2 1/8	(967)	2-9 1/16	(839)	8.73	(0.81)
3634	E	3-2 1/8	(967)	2-11 1/16	(889)	9.26	(0.86)
3636	E	3-2 1/8	(967)	3-1 1/16	(940)	9.79	(0.91)
4014		3-6 1/8	(1069)	1-3 11/16	(398)	4.58	(0.43)
4016		3-6 1/8	(1069)	1-5 11/16	(449)	5.16	(0.48)
4018		3-6 1/8	(1069)	1-7 11/16	(499)	5.75	(0.53)
4020		3-6 1/8	(1069)	1-9 11/16	(550)	6.33	(0.59)
4022		3-6 1/8	(1069)	1-11 11/16	(601)	6.91	(0.64)
4024	E	3-6 1/8	(1069)	2-1 11/16	(652)	7.50	(0.70)
4026	E	3-6 1/8	(1069)	2-3 11/16	(703)	8.08	(0.75)
4028	E	3-6 1/8	(1069)	2-5 11/16	(753)	8.67	(0.81)
4030	E	3-6 1/8	(1069)	2-7 11/16	(804)	9.25	(0.86)
4032	E	3-6 1/8	(1069)	2-9 11/16	(855)	9.84	(0.91)
4034	E	3-6 1/8	(1069)	2-11 11/16	(906)	10.42	(0.97)
4036	E	3-6 1/8	(1069)	3-1 11/16	(957)	11.01	(1.02)

Egress and Vent Openings: High Performance Sill Liner

CN	Opening Width		Opening Height HP Sill Liner		Egress Opening	
	ft - in	mm	ft - in	mm	ft^2	m^2
2014	1-10 1/8	(561)	1-1 1/16	(332)	2.00	(0.19)
2016	1-10 1/8	(561)	1-3 1/16	(383)	2.31	(0.21)
2018	1-10 1/8	(561)	1-5 1/16	(433)	2.62	(0.24)
2020	1-10 1/8	(561)	1-7 1/16	(484)	2.92	(0.27)
2022	1-10 1/8	(561)	1-9 1/16	(535)	3.23	(0.30)
2024	1-10 1/8	(561)	1-11 1/16	(586)	3.54	(0.33)
2026	1-10 1/8	(561)	2-1 1/16	(637)	3.84	(0.36)
2028	1-10 1/8	(561)	2-3 1/16	(687)	4.15	(0.39)
2030	1-10 1/8	(561)	2-5 1/16	(738)	4.46	(0.41)
2032	1-10 1/8	(561)	2-7 1/16	(789)	4.76	(0.44)
2034	1-10 1/8	(561)	2-9 1/16	(840)	5.07	(0.47)
2036	1-10 1/8	(561)	2-11 1/16	(891)	5.38	(0.50)
2414	2-2 1/8	(663)	1-1 13/16	(350)	2.49	(0.23)
2416	2-2 1/8	(663)	1-3 13/16	(400)	2.86	(0.27)
2418	2-2 1/8	(663)	1-5 13/16	(451)	3.22	(0.30)
2420	2-2 1/8	(663)	1-7 13/16	(502)	3.58	(0.33)
2422	2-2 1/8	(663)	1-9 13/16	(553)	3.94	(0.37)
2424	2-2 1/8	(663)	1-11 13/16	(604)	4.31	(0.40)
2426	2-2 1/8	(663)	2-1 13/16	(654)	4.67	(0.43)
2428	2-2 1/8	(663)	2-3 13/16	(705)	5.03	(0.47)
2430	2-2 1/8	(663)	2-5 13/16	(756)	5.39	(0.50)
2432 E	2-2 1/8	(663)	2-7 13/16	(807)	5.75	(0.53)
2434 E	2-2 1/8	(663)	2-9 13/16	(858)	6.12	(0.57)
2436 E	2-2 1/8	(663)	2-11 13/16	(908)	6.48	(0.60)
2814	2-6 1/8	(764)	1-1 13/16	(350)	2.88	(0.27)
2816	2-6 1/8	(764)	1-3 13/16	(400)	3.29	(0.31)
2818	2-6 1/8	(764)	1-5 13/16	(451)	3.71	(0.34)
2820	2-6 1/8	(764)	1-7 13/16	(502)	4.13	(0.38)
2822	2-6 1/8	(764)	1-9 13/16	(553)	4.55	(0.42)
2824	2-6 1/8	(764)	1-11 13/16	(604)	4.97	(0.46)
2826	2-6 1/8	(764)	2-1 13/16	(654)	5.38	(0.50)
2828 E	2-6 1/8	(764)	2-3 13/16	(705)	5.80	(0.54)
2830 E	2-6 1/8	(764)	2-5 13/16	(756)	6.22	(0.58)
2832 E	2-6 1/8	(764)	2-7 13/16	(807)	6.64	(0.62)
2834 E	2-6 1/8	(764)	2-9 13/16	(858)	7.06	(0.66)
2836 E	2-6 1/8	(764)	2-11 13/16	(908)	7.47	(0.69)

CN	Opening Width		Opening Height HP Sill Liner		Egress Opening	
	ft - in	mm	ft - in	mm	ft^2	m^2
3214	2-10 1/8	(866)	1-1 9/16	(345)	3.21	(0.30)
3216	2-10 1/8	(866)	1-3 9/16	(395)	3.68	(0.34)
3218	2-10 1/8	(866)	1-5 9/16	(446)	4.16	(0.39)
3220	2-10 1/8	(866)	1-7 9/16	(497)	4.63	(0.43)
3222	2-10 1/8	(866)	1-9 9/16	(548)	5.10	(0.47)
3224	2-10 1/8	(866)	1-11 9/16	(599)	5.58	(0.52)
3226 E	2-10 1/8	(866)	2-1 9/16	(649)	6.05	(0.56)
3228 E	2-10 1/8	(866)	2-3 9/16	(700)	6.52	(0.61)
3230 E	2-10 1/8	(866)	2-5 9/16	(751)	7.00	(0.65)
3232 E	2-10 1/8	(866)	2-7 9/16	(802)	7.47	(0.69)
3234 E	2-10 1/8	(866)	2-9 9/16	(853)	7.95	(0.74)
3236 E	2-10 1/8	(866)	2-11 9/16	(903)	8.42	(0.78)
3614	3-2 1/8	(967)	1-2 3/16	(359)	3.74	(0.35)
3616	3-2 1/8	(967)	1-4 3/16	(410)	4.27	(0.40)
3618	3-2 1/8	(967)	1-6 3/16	(461)	4.80	(0.45)
3620	3-2 1/8	(967)	1-8 3/16	(512)	5.33	(0.49)
3622	3-2 1/8	(967)	1-10 3/16	(562)	5.86	(0.54)
3624 E	3-2 1/8	(967)	2-0 3/16	(613)	6.39	(0.59)
3626 E	3-2 1/8	(967)	2-2 3/16	(664)	6.91	(0.64)
3628 E	3-2 1/8	(967)	2-4 3/16	(715)	7.44	(0.69)
3630 E	3-2 1/8	(967)	2-6 3/16	(766)	7.97	(0.74)
3632 E	3-2 1/8	(967)	2-8 3/16	(816)	8.50	(0.79)
3634 E	3-2 1/8	(967)	2-10 3/16	(867)	9.03	(0.84)
3636 E	3-2 1/8	(967)	3-0 3/16	(918)	9.56	(0.89)
4014	3-6 1/8	(1069)	1-2 13/16	(375)	4.32	(0.40)
4016	3-6 1/8	(1069)	1-4 13/16	(426)	4.91	(0.46)
4018	3-6 1/8	(1069)	1-6 13/16	(477)	5.49	(0.51)
4020	3-6 1/8	(1069)	1-8 13/16	(528)	6.07	(0.56)
4022	3-6 1/8	(1069)	1-10 13/16	(579)	6.66	(0.62)
4024 E	3-6 1/8	(1069)	2-0 13/16	(629)	7.24	(0.67)
4026 E	3-6 1/8	(1069)	2-2 13/16	(680)	7.83	(0.73)
4028 E	3-6 1/8	(1069)	2-4 13/16	(731)	8.41	(0.78)
4030 E	3-6 1/8	(1069)	2-6 13/16	(782)	9.00	(0.84)
4032 E	3-6 1/8	(1069)	2-8 13/16	(833)	9.58	(0.89)
4034 E	3-6 1/8	(1069)	2-10 13/16	(883)	10.17	(0.94)
4036 E	3-6 1/8	(1069)	3-0 13/16	(934)	10.75	(1.00)

Standard Unit Measurements: RT2

Standard Double Hung Round Top Unit Measurements						
	Width				Height	
CN	Rough Opening		Rough Opening Radius		Rough Opening	
	ft - in	mm	ft - in	mm	ft - in	mm
2015	2-2 3/8	(670)	1-1 3/16	(335)	1-3 3/4	(400)
2417	2-6 3/8	(772)	1-3 3/16	(386)	1-5 3/4	(451)
2618	2-8 3/8	(822)	1-4 3/16	(411)	1-6 3/4	(476)
2819	2-10 3/8	(873)	1-5 3/16	(437)	1-7 3/4	(502)
3020	3-0 3/8	(924)	1-6 3/16	(462)	1-8 3/4	(527)
3221	3-2 3/8	(975)	1-7 3/16	(487)	1-9 3/4	(552)
3623	3-6 3/8	(1076)	1-9 3/16	(538)	1-11 3/4	(603)
4025	3-10 3/8	(1178)	1-11 3/16	(589)	2-1 3/4	(654)
5027	4-3 3/4	(1314)	2-1 7/8	(657)	2-4 7/16	(722)
5831	4-11 3/4	(1518)	2-5 7/8	(759)	2-8 7/16	(824)
6635	5-7 3/4	(1721)	2-9 7/8	(860)	3-0 7/16	(926)
7439	6-3 3/4	(1924)	3-1 7/8	(962)	3-4 7/16	(1027)

Standard Unit Measurements: RT6 - Eyebrow Above Springline

Standard Double Hung Round Top Unit Measurements								
	Width				Height			
CN	Rough Opening		Rough Opening Radius		Rough Opening		Rough Opening Springline	
	ft - in	mm	ft - in	mm	ft - in	mm	ft - in	mm
2014	2-2 3/8	(670)	2-0 1/2	(622)	3-4 1/2	(1029)	3-0 21/32	(931)
2016	2-2 3/8	(670)	2-0 1/2	(622)	3-8 1/2	(1130)	3-4 21/32	(1033)
2018	2-2 3/8	(670)	2-0 1/2	(622)	4-0 1/2	(1232)	3-8 21/32	(1134)
2020	2-2 3/8	(670)	2-0 1/2	(622)	4-4 1/2	(1334)	4-0 21/32	(1236)
2022	2-2 3/8	(670)	2-0 1/2	(622)	4-8 1/2	(1435)	4-4 21/32	(1337)
2024	2-2 3/8	(670)	2-0 1/2	(622)	5-0 1/2	(1537)	4-8 21/32	(1439)
2026	2-2 3/8	(670)	2-0 1/2	(622)	5-4 1/2	(1638)	5-0 21/32	(1541)
2028	2-2 3/8	(670)	2-0 1/2	(622)	5-8 1/2	(1740)	5-4 21/32	(1642)
2030	2-2 3/8	(670)	2-0 1/2	(622)	6-0 1/2	(1842)	5-8 21/32	(1744)
2032	2-2 3/8	(670)	2-0 1/2	(622)	6-4 1/2	(1943)	6-0 21/32	(1845)
2034	2-2 3/8	(670)	2-0 1/2	(622)	6-8 1/2	(2045)	6-4 21/32	(1947)
2036	2-2 3/8	(670)	2-0 1/2	(622)	7-0 1/2	(2146)	6-8 21/32	(2049)
2414	2-6 3/8	(772)	2-0 1/2	(622)	3-5 15/16	(1064)	3-0 5/8	(930)
2416	2-6 3/8	(772)	2-0 1/2	(622)	3-9 15/16	(1166)	3-4 5/8	(1032)
2418	2-6 3/8	(772)	2-0 1/2	(622)	4-1 15/16	(1268)	3-8 5/8	(1133)
2420	2-6 3/8	(772)	2-0 1/2	(622)	4-5 15/16	(1369)	4-0 5/8	(1235)
2422	2-6 3/8	(772)	2-0 1/2	(622)	4-9 15/16	(1471)	4-4 5/8	(1337)
2424	2-6 3/8	(772)	2-0 1/2	(622)	5-1 15/16	(1572)	4-8 5/8	(1438)
2426	2-6 3/8	(772)	2-0 1/2	(622)	5-5 15/16	(1674)	5-0 5/8	(1540)
2428	2-6 3/8	(772)	2-0 1/2	(622)	5-9 15/16	(1776)	5-4 5/8	(1641)
2430	2-6 3/8	(772)	2-0 1/2	(622)	6-1 15/16	(1877)	5-8 5/8	(1743)
2432	2-6 3/8	(772)	2-0 1/2	(622)	6-5 15/16	(1979)	6-0 5/8	(1845)
2434	2-6 3/8	(772)	2-0 1/2	(622)	6-9 15/16	(2080)	6-4 5/8	(1946)
2436	2-6 3/8	(772)	2-0 1/2	(622)	7-1 15/16	(2182)	6-8 5/8	(2048)
2814	2-10 3/8	(873)	2-6 1/2	(775)	3-5 15/16	(1064)	3-0 5/8	(930)
2816	2-10 3/8	(873)	2-6 1/2	(775)	3-9 15/16	(1166)	3-4 5/8	(1032)
2818	2-10 3/8	(873)	2-6 1/2	(775)	4-1 15/16	(1268)	3-8 5/8	(1133)
2820	2-10 3/8	(873)	2-6 1/2	(775)	4-5 15/16	(1369)	4-0 5/8	(1235)
2822	2-10 3/8	(873)	2-6 1/2	(775)	4-9 15/16	(1471)	4-4 5/8	(1337)
2824	2-10 3/8	(873)	2-6 1/2	(775)	5-1 15/16	(1572)	4-8 5/8	(1438)
2826	2-10 3/8	(873)	2-6 1/2	(775)	5-5 15/16	(1674)	5-0 5/8	(1540)
2828	2-10 3/8	(873)	2-6 1/2	(775)	5-9 15/16	(1776)	5-4 5/8	(1641)
2830	2-10 3/8	(873)	2-6 1/2	(775)	6-1 15/16	(1877)	5-8 5/8	(1743)
2832	2-10 3/8	(873)	2-6 1/2	(775)	6-5 15/16	(1979)	6-0 5/8	(1845)
2834	2-10 3/8	(873)	2-6 1/2	(775)	6-9 15/16	(2080)	6-4 5/8	(1946)
2836	2-10 3/8	(873)	2-6 1/2	(775)	7-1 15/16	(2182)	6-8 5/8	(2048)
3214	3-2 3/8	(975)	3-4 1/2	(1029)	3-5 1/2	(1054)	3-0 21/32	(931)
3216	3-2 3/8	(975)	3-4 1/2	(1029)	3-9 1/2	(1156)	3-4 21/32	(1033)
3218	3-2 3/8	(975)	3-4 1/2	(1029)	4-1 1/2	(1257)	3-8 21/32	(1134)
3220	3-2 3/8	(975)	3-4 1/2	(1029)	4-5 1/2	(1359)	4-0 21/32	(1236)
3222	3-2 3/8	(975)	3-4 1/2	(1029)	4-9 1/2	(1461)	4-4 21/32	(1337)
3224	3-2 3/8	(975)	3-4 1/2	(1029)	5-1 1/2	(1562)	4-8 21/32	(1439)
3226	3-2 3/8	(975)	3-4 1/2	(1029)	5-5 1/2	(1664)	5-0 21/32	(1541)
3228	3-2 3/8	(975)	3-4 1/2	(1029)	5-9 1/2	(1765)	5-4 21/32	(1642)
3230	3-2 3/8	(975)	3-4 1/2	(1029)	6-1 1/2	(1867)	5-8 21/32	(1744)
3232	3-2 3/8	(975)	3-4 1/2	(1029)	6-5 1/2	(1969)	6-0 21/32	(1845)
3234	3-2 3/8	(975)	3-4 1/2	(1029)	6-9 1/2	(2070)	6-4 21/32	(1947)
3236	3-2 3/8	(975)	3-4 1/2	(1029)	7-1 1/2	(2172)	6-8 21/32	(2049)

Standard Unit Measurements: RT6 - Eyebrow Above Springline

Standard Double Hung Round Top Unit Measurements								
	Width				Height			
CN	Rough Opening		Rough Opening Radius		Rough Opening w/subsill		Rough Opening Springline	
	ft - in	mm	ft - in	mm	ft - in	mm	ft - in	mm
3614	3-6 3/8	(1076)	3-4 1/2	(1029)	3-6 11/16	(1083)	3-0 21/32	(931)
3616	3-6 3/8	(1076)	3-4 1/2	(1029)	3-10 11/16	(1185)	3-4 21/32	(1033)
3618	3-6 3/8	(1076)	3-4 1/2	(1029)	4-2 11/16	(1287)	3-8 21/32	(1134)
3620	3-6 3/8	(1076)	3-4 1/2	(1029)	4-6 11/16	(1388)	4-0 21/32	(1236)
3622	3-6 3/8	(1076)	3-4 1/2	(1029)	4-10 11/16	(1490)	4-4 21/32	(1337)
3624	3-6 3/8	(1076)	3-4 1/2	(1029)	5-2 11/16	(1591)	4-8 21/32	(1439)
3626	3-6 3/8	(1076)	3-4 1/2	(1029)	5-6 11/16	(1693)	5-0 21/32	(1541)
3628	3-6 3/8	(1076)	3-4 1/2	(1029)	5-10 11/16	(1795)	5-4 21/32	(1642)
3630	3-6 3/8	(1076)	3-4 1/2	(1029)	6-2 11/16	(1896)	5-8 21/32	(1744)
3632	3-6 3/8	(1076)	3-4 1/2	(1029)	6-6 11/16	(1998)	6-0 21/32	(1845)
3634	3-6 3/8	(1076)	3-4 1/2	(1029)	6-10 11/16	(2099)	6-4 21/32	(1947)
3636	3-6 3/8	(1076)	3-4 1/2	(1029)	7-2 11/16	(2201)	6-8 21/32	(2049)
4014	3-10 3/8	(1178)	3-4 1/2	(1029)	3-7 15/16	(1116)	3-0 5/8	(930)
4016	3-10 3/8	(1178)	3-4 1/2	(1029)	3-11 15/16	(1218)	3-4 5/8	(1032)
4018	3-10 3/8	(1178)	3-4 1/2	(1029)	4-3 15/16	(1319)	3-8 5/8	(1133)
4020	3-10 3/8	(1178)	3-4 1/2	(1029)	4-7 15/16	(1421)	4-0 5/8	(1235)
4022	3-10 3/8	(1178)	3-4 1/2	(1029)	4-11 15/16	(1522)	4-4 5/8	(1337)
4024	3-10 3/8	(1178)	3-4 1/2	(1029)	5-3 15/16	(1624)	4-8 5/8	(1438)
4026	3-10 3/8	(1178)	3-4 1/2	(1029)	5-7 15/16	(1726)	5-0 5/8	(1540)
4028	3-10 3/8	(1178)	3-4 1/2	(1029)	5-11 15/16	(1827)	5-4 5/8	(1641)
4030	3-10 3/8	(1178)	3-4 1/2	(1029)	6-3 15/16	(1929)	5-8 5/8	(1743)
4032	3-10 3/8	(1178)	3-4 1/2	(1029)	6-7 15/16	(2030)	6-0 5/8	(1845)
4034	3-10 3/8	(1178)	3-4 1/2	(1029)	6-11 15/16	(2132)	6-4 5/8	(1946)
4036	3-10 3/8	(1178)	3-4 1/2	(1029)	7-3 15/16	(2234)	6-8 5/8	(2048)

Section Details: Ultimate Single Hung Round Top - Operating

Scale: 3" = 1' 0"

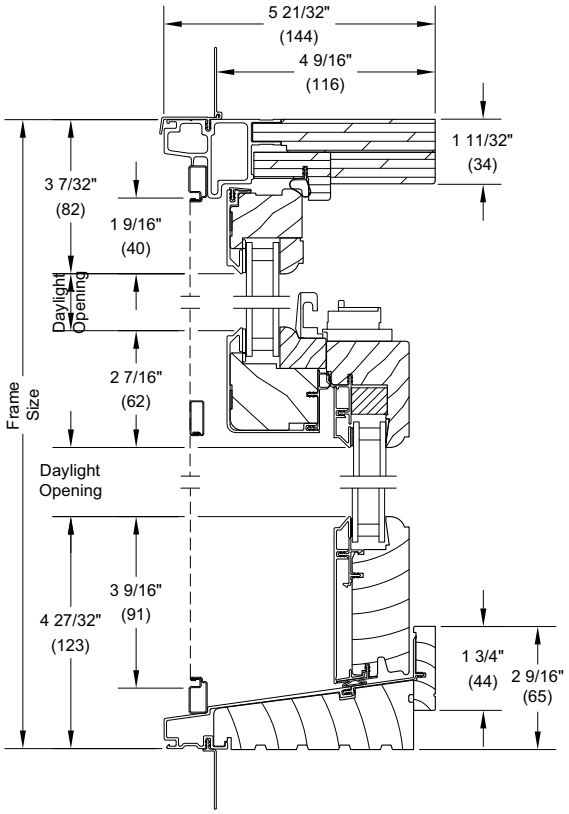

Head Jamb and Sill

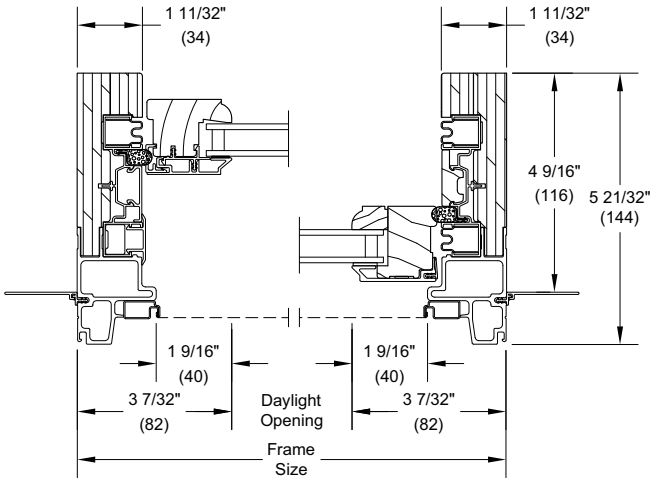

RT2 Jambs

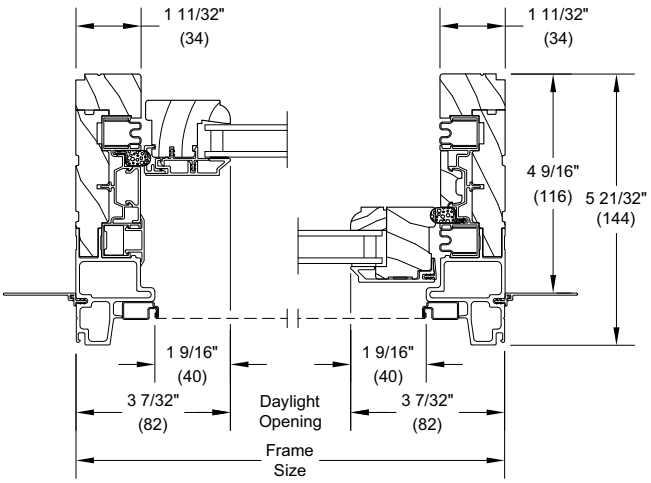

RT6 Jambs

Section Details: Ultimate Double Hung Round Top - Operating

Scale: 3" = 1' 0"

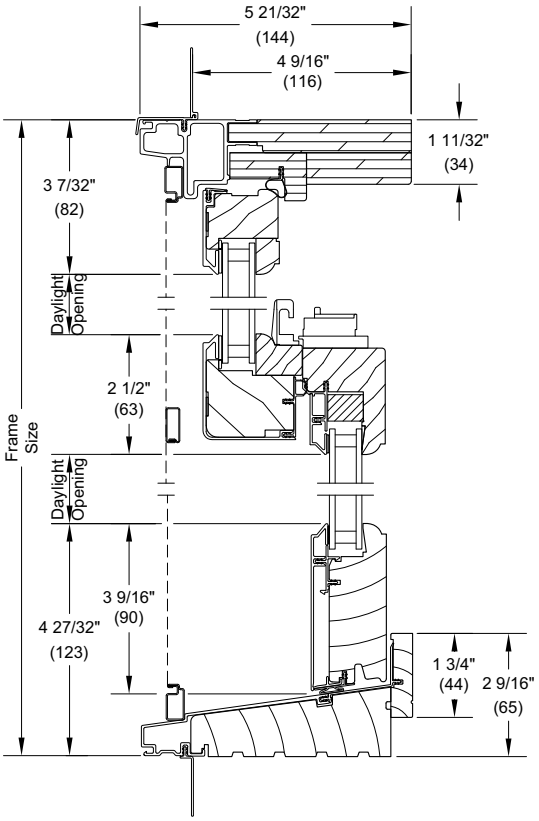

Head Jamb and Sill

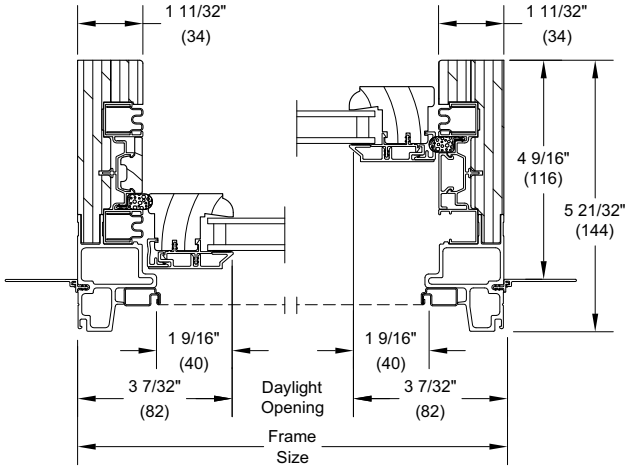

RT2 Jambs

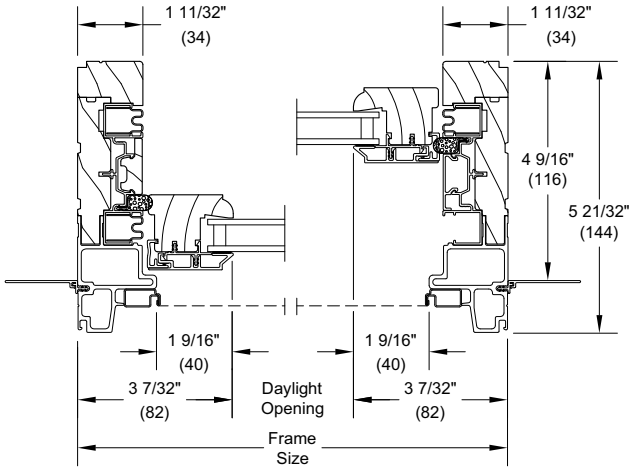

RT6 Jambs

Section Details: Transom and Picture

Scale: 3" = 1' 0"

Transom

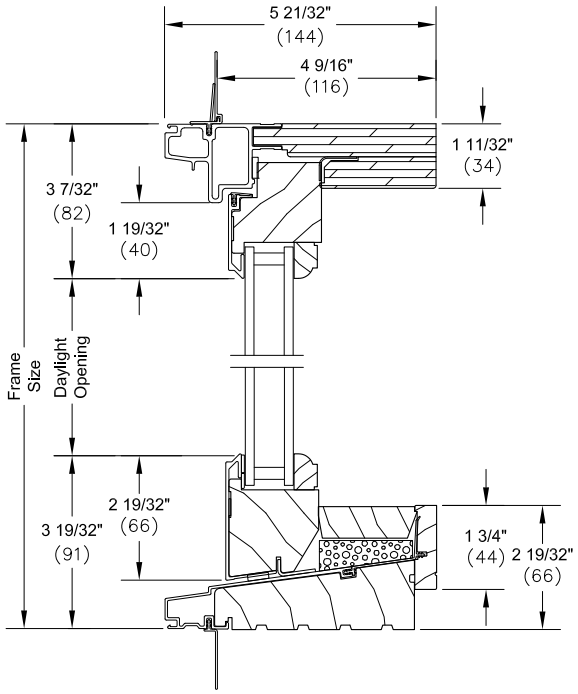

Head Jamb and Sill

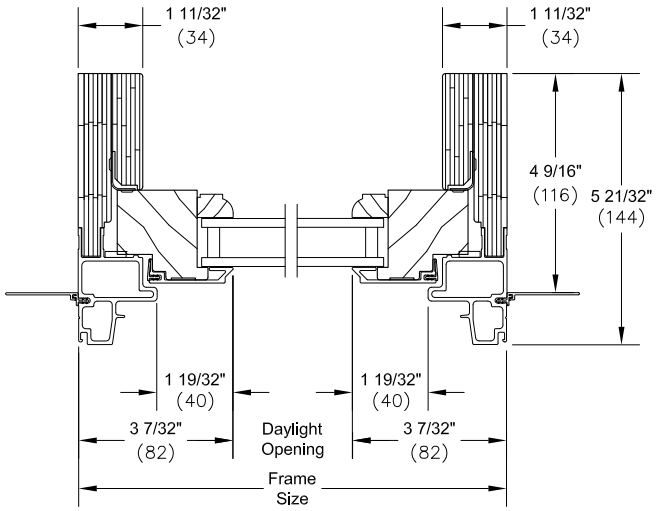

RT2 Jambs

Picture

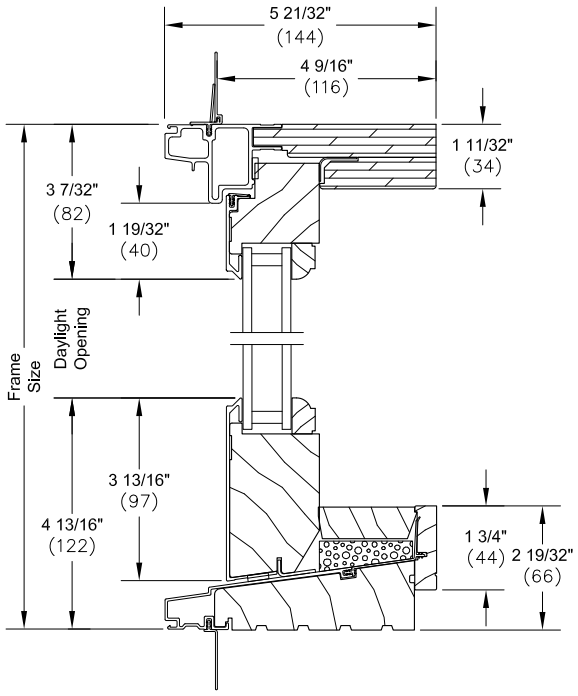

Head Jamb and Sill

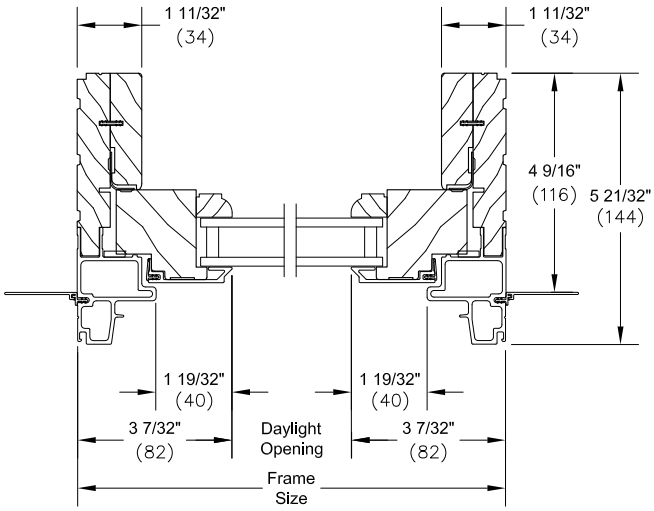

RT6 Jambs

Section Details: Casing Options

Scale: 3" = 1' 0"

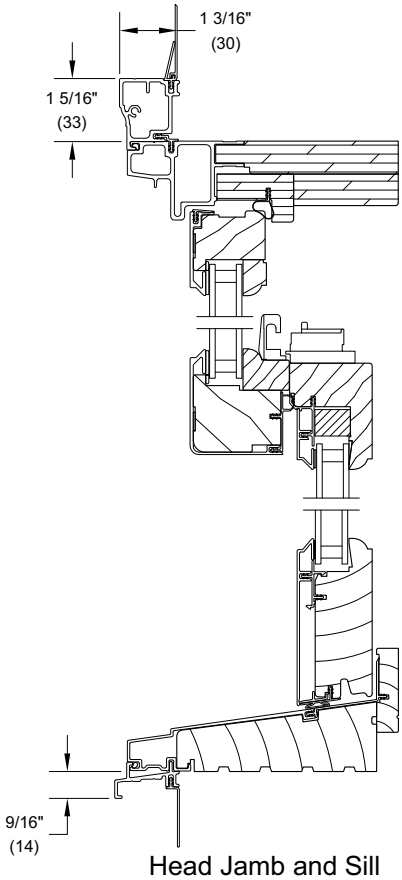

Head Jamb and Sill
with Clad Brick Mould Casing

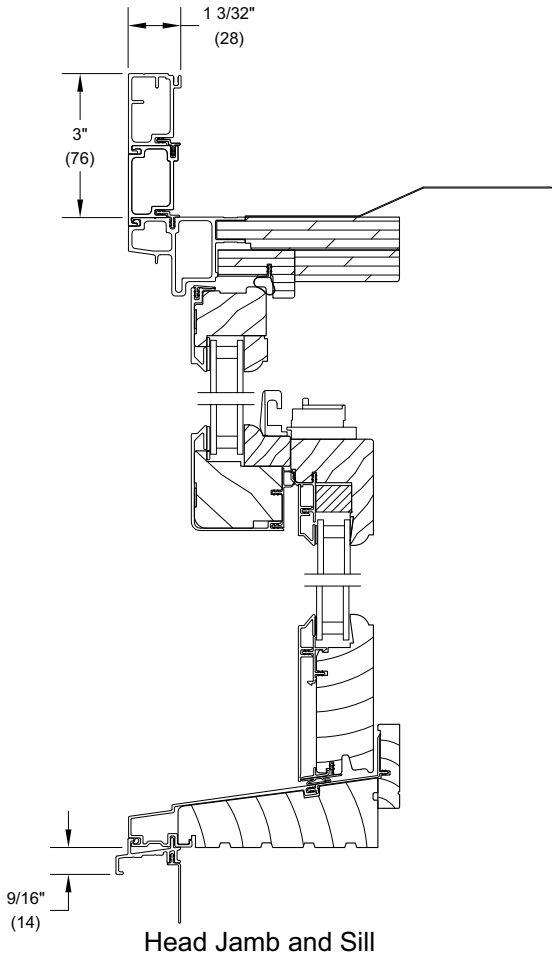

Head Jamb and Sill
with Clad Flat Casing