Clad Magnum Tilt-Turn/Hopper

Unit Features 1
Standard Divided Lites 2
Optional Interior Square Simulated Divided Lites 3
Minimum and Maximum Measurements / Certified Sizes and Ratings 4
Unit Operation 5
Measurement Conversions 6
Section Details: Operating 7
Section Details: Casing Options 8
Section Details: Mullions 9

Unit Features

Clad Magnum Tilt-Turn: CMTT

Clad Magnum Hopper: CMHOP

NOTE: Clad Magnum Hopper not available with CE mark.

Frame:

- Frame thickness: 3 1/16" (78).
- Sill thickness: 1 11/16" (43).
- Frame width: 2 13/32" (61), 4 9/16" (116).

Sash:

- Sash, Stile and Rail thickness: 2 1/4" (57).
- Interior glazed.

Hardware:

- Tilt-Turn: Multi-point locking hardware with Bronze pistol grip handle.
  - Optional Hardware Color: White, Satin Chrome, Solid Brass, Bronze keyed or White keyed handle.
  - Optional Features: turn restrictor, security key or additional scissor stay.
- Tilt-Turn Keyed Stationary: Key operated lock allows authorized swing only.
- Hopper: Bronze pistol grip handle.
  - Optional Hardware Color: White, Satin Chrome, or Solid Brass.
  - Tilt Stay - Limiter on Hopper.

Weather Strip:

- Weather Strip: Resilient leaf type gasket. Color: Black.

Insect Screen:

- Standard screen frame is roll formed aluminum
- Aluminum surround to match exterior frame clad color
- Screen Mesh:
  - Standard: Charcoal Fiberglass
  - Optional: Charcoal High Transparency Fiberglass Mesh, Charcoal Aluminum Wire, Black Aluminum Wire, Bright Aluminum Wire, or Bright Bronze Aluminum Wire

Glass and Glazing:

- Glazing Seal: Silicone glazed.
- Glazing Type: Clear glass, optional glass types: Low E2 Argon, Low E3 Argon, Laminated, Tempered, Obscure, Bronze tint, Gray tint, and Reflective Bronze.
- Optional Glazing available: Low E1 Argon, Low E3 Argon, 1" Tripane Low E1 outer piece and Low E1 Argon inner piece, 1" Tripane Low E2 outer piece and Low E2 Krypton-Argon inner piece, 1" Tripane Low E3 outer piece and Low E1 Krypton-Argon, clear, tints, tempered, obscure, decorative glass options and others.
- Insulating glass will be altitude adjusted with capillary tubes for higher elevations.

CE Optional Glazing:

- Glazing Method: Insulating
- Glazing Seal: Silicone glazed
- Standard glass is 7/8" (22) insulating Low E2 Argon or Air
- Optional dual glazing available: Low E1 argon or air, Low E3 Argon or air, Low E2/ERS Argon or air, clear, laminated clear and tints, tempered, sandblasted
- Optional 1" Tripane glass types: Low E1/E1 Argon or Krypton-Argon, Low E2/E2 Argon or Krypton-Argon, Low E3/E1 Argon or Krypton-Argon
- Glass panes available in 3, 4, and 6 mm thicknesses
- Laminated panes available in 7.0 and 7.8 mm thicknesses
- Glazing will be altitude adjusted for higher elevations, Argon, Argon-Krypton, and Krypton gas not included

Standard Divided Lites

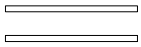

Insulating Glass

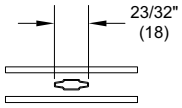

Aluminum 11/16"
Contour GBG

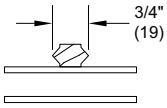

3/4" Grille

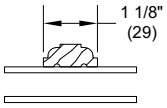

1 1/8" Grille

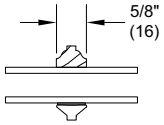

5/8" SDL

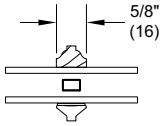

5/8" SDL
W/Spacer

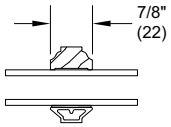

7/8" SDL

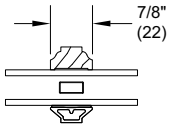

7/8" SDL
W/Spacer Bar

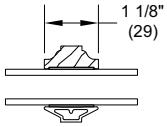

1 1/8" SDL

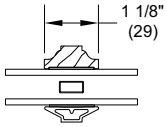

1 1/8" SDL
W/Spacer Bar

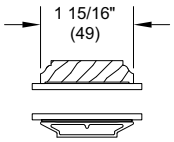

1 15/16" SDL

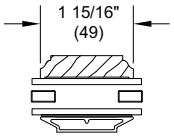

1 15/16" SDL
W/Two Spacer Bars

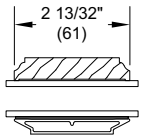

2 13/32" SDL

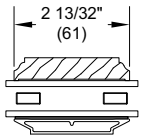

2 13/32" SDL
W/Two Spacer Bars

Optional Interior Square Simulated Divided Lites

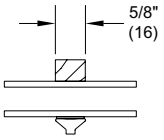

5/8" SDL

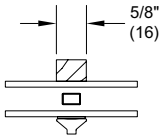

5/8" SDL
W/Spacer

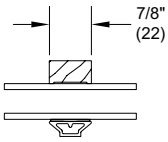

7/8" SDL

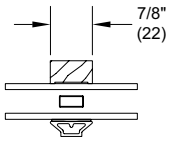

7/8" SDL
W/Spacer Bar

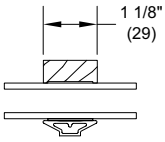

1 1/8" SDL

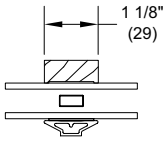

1 1/8" SDL
W/Spacer Bar

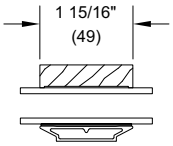

1 15/16 " SDL

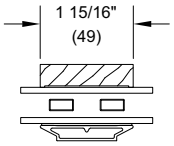

1 15/16" SDL
W/Two Spacer Bars

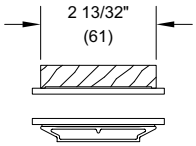

2 13/32" SDL

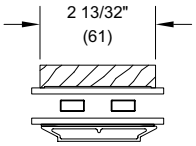

2 13/32" SDL
W/Two Spacer Bars

Minimum and Maximum Measurements / Certified Sizes and Ratings

Minimum and Maximum Guidelines									
Unit Type		Min Frame Size Unit				Max Frame Size Unit			
		Width		Height		Width		Height	
		in	mm	in	mm	in	mm	in	mm
Magnum Hopper	Insulating Glass 7/8" (22) or 1" (25)	23	(584)	19 1/2	(495)	71	(1803)	59 1/2	(1511)

CE Minimum and Maximum Guidelines									
Unit Type		Min Frame Size Unit				Max Frame Size Unit			
		Width		Height		Width		Height	
		in	mm	in	mm	in	mm	in	mm
Clad Magnum Tilt Turn/Inswing Casement	Insulating Glass 7/8" (22) or 1" (25)	20	(508)	24	(610)	48	(1219)	72	(1829)

Product	Air Tested to psf	Water Tested to psf	Structural Tested to psf	Certification Rating	Design Pressure (DP)	Max Overall Width		Max Overall Height	
						in	mm	in	mm
Clad Magnum Hopper	1.57	6.06	60.19	CW-PG40-AP	40	65	(1651)	49	(1245)
Clad Magnum Tilt Turn	1.57	6.06	60.19	CW-PG40-DAW	40	49	(1245)	73	(1854)

Product	Air Tested to psf	Water Tested to psf	Wind Load Resistance to psf	Certification Rating	Design Pressure (DP)	Max Overall Width		Max Overall Height	
						in	mm	in	mm
Clad Magnum Inswing Casement	1.57	4.18	62.66	CW-PG40-C	40	49	(1245)	73	(1854)

NOTE: For CE ratings, please refer to CE Performance Section.

Unit Operation

Tilt-Turn Handle Location			
Frame Size Height 2 13/32" Jamb Unit		Handle Height from Bottom of Sash	
24" - 27 7/8"	(610-708)	7 7/16"	(189)
27 15/16" - 35 3/4"	(710 - 908)	11 1/16"	(281)
35 13/16" - 43 5/8"	(910 - 1108)	17"	(432)
43 11/16" - 51 1/2"	(1110 - 1308)	20 15/16"	(532)
51 9/16" - 75 1/8"	(1310 - 1908)	22 7/8"	(581)
75 3/16" - 96"	(1910 - 2489)	40 1/16"	(1018)

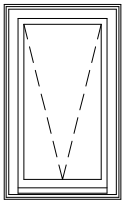

Hopper

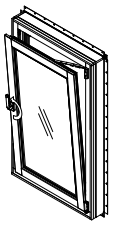

Tilt position

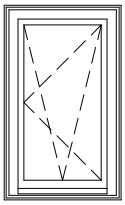

Left

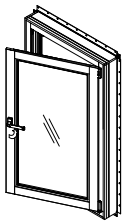

Turn position

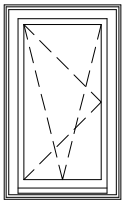

Right

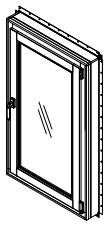

Lock position

NOTE: All operations viewed from exterior.

Hardware Size Chart

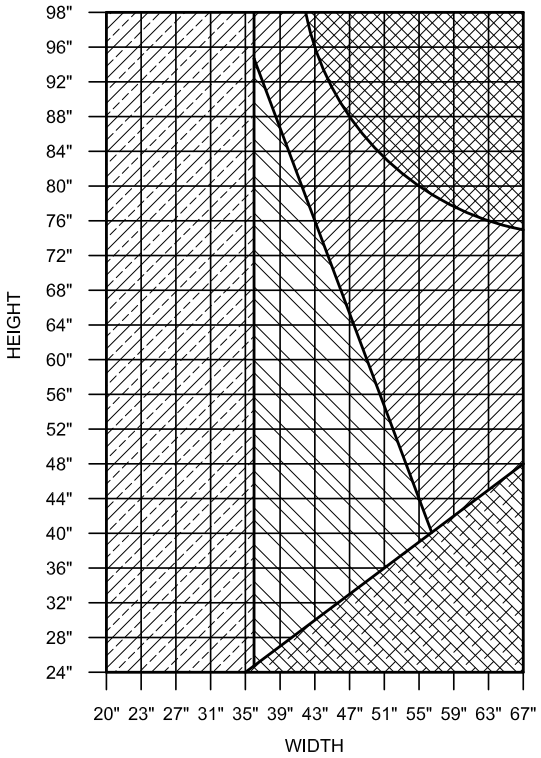

LEGEND	
	FOR UNITS IN THIS SIZE RANGE CONTACT MARVIN WINDOW ARCHITECTURAL DEPARTMENT
	UNITS IN THIS SIZE RANGE REQUIRE ADDITIONAL SCISSOR STAY HARDWARE
	ADDITIONAL OPTIONAL SCISSOR STAY AVAILABLE
	ADDITIONAL SCISSOR STAY NOT AVAILABLE UNDER 36"
	NOT AVAILABLE

Measurement Conversions

Scale: 1 1/2" = 1' 0"

UNIT WITH 2 13/32" JAMB		Width		Height	
From	**To**				
Rough Opening		**in**	**mm**	**in**	**mm**
OM of Frame	Rough Opening	+ 1	(25)	+ 1/2	(13)
Masonry Opening w/out BMC	Rough Opening	+ 1/2	(13)	+ 1/4	(06)
Masonry Opening w/CBMC	Rough Opening	-2 1/8	(54)	-1 11/16	(43)
Masonry Opening w/Flat Casing	Rough Opening	-5 1/2	(140)	-3 3/8	(86)
Masonry Opening w/BMC (all sides)	Rough Opening	-2 1/8	(54)	-2 3/8	(60)
Masonry Opening w/Flat Casing (all sides)	Rough Opening	-5 1/2	(140)	-5 1/4	(133)
Glass Size - IG	Rough Opening	+ 9	(229)	+ 8 1/2	(216)
Glass Size - SG	Rough Opening	+ 8 13/16	(224)	+ 8 5/16	(211)
OM of Sash	Rough Opening	+ 3 13/16	(97)	+ 3 5/16	(84)
Sash		**in**	**mm**	**in**	**mm**
OM of Frame	OM of sash	-2 13/16	(71)	-2 13/16	(71)
Daylight Opening	OM of sash	+ 6 5/16	(160)	+ 6 5/16	(160)
Aluminum Frame Screen / Energy Panel		**in**	**mm**	**in**	**mm**
OM of Frame	OM of sash	-2 13/16	(71)	-2 13/16	(71)
Daylight Opening	OM of sash	+ 6 5/16	(160)	+ 6 5/16	(160)
Grilles		**in**	**mm**	**in**	**mm**
Daylight Opening - IG	Glass	-1 1/8	(29)	-1 1/8	(29)
Daylight Opening - SG	Glass	-1 5/16	(33)	-1 5/16	(33)

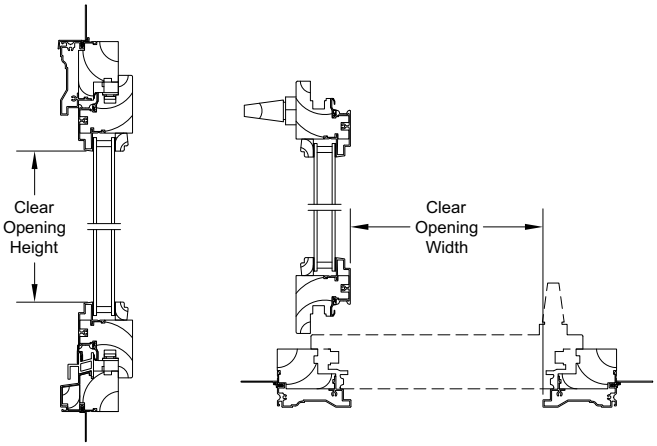

Net Clear Opening:

Rough Opening Width - 7 1/8" (181)

Rough Opening Height - 6" (152)

Section Details: Operating

Scale: 3" = 1' 0"

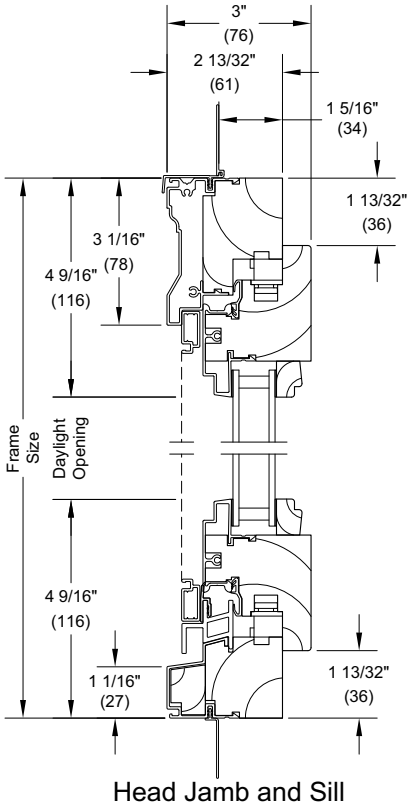

Head Jamb and Sill

Operating - 2 13/32" Jambs

NOTE: Handle location shown is for Magnum Tilt-Turn. Handle is centered on the top rail for Hopper operation

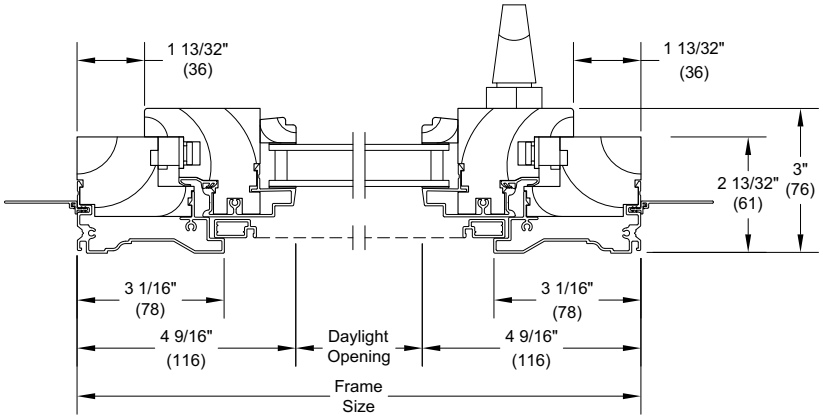

Jambs

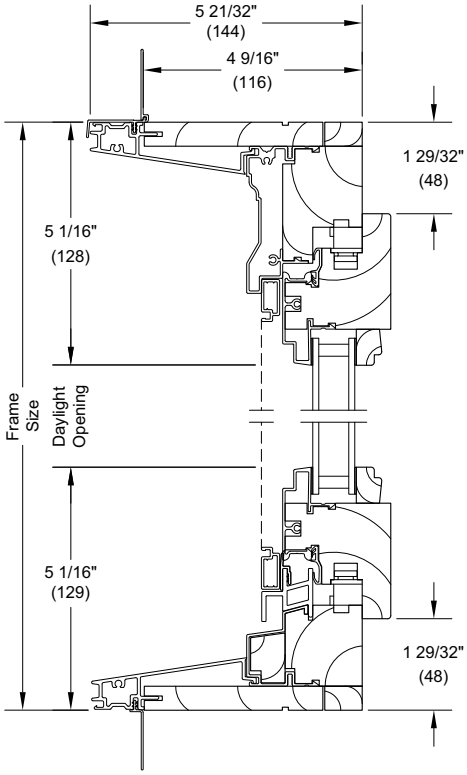

Head Jamb and Sill

Operating - 4 9/16" Jambs

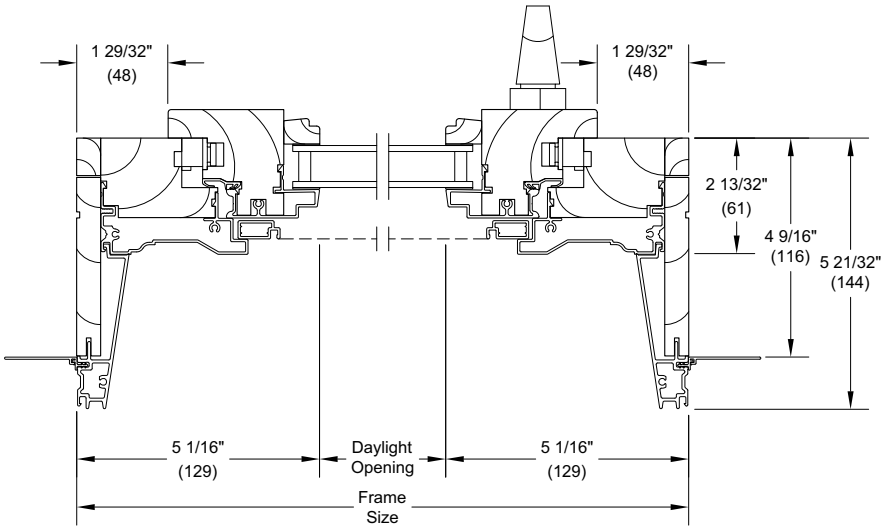

Jambs

Section Details: Casing Options

Scale: 3" = 1' 0"

4 9/16" Jambs

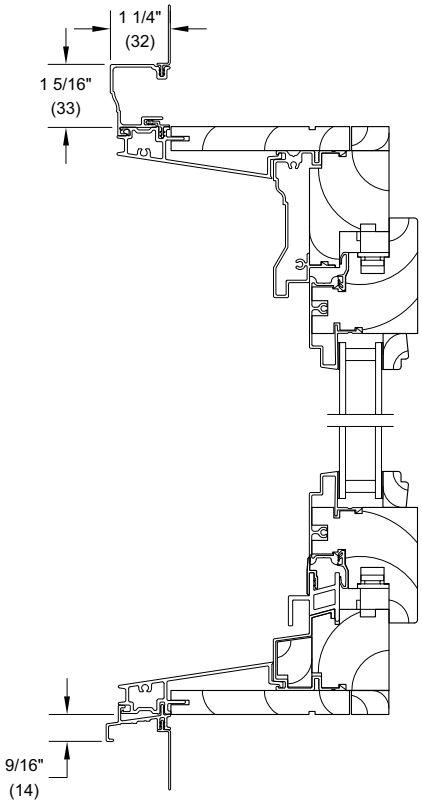

Head Jamb and Sill
with Clad Brick Mould Casing

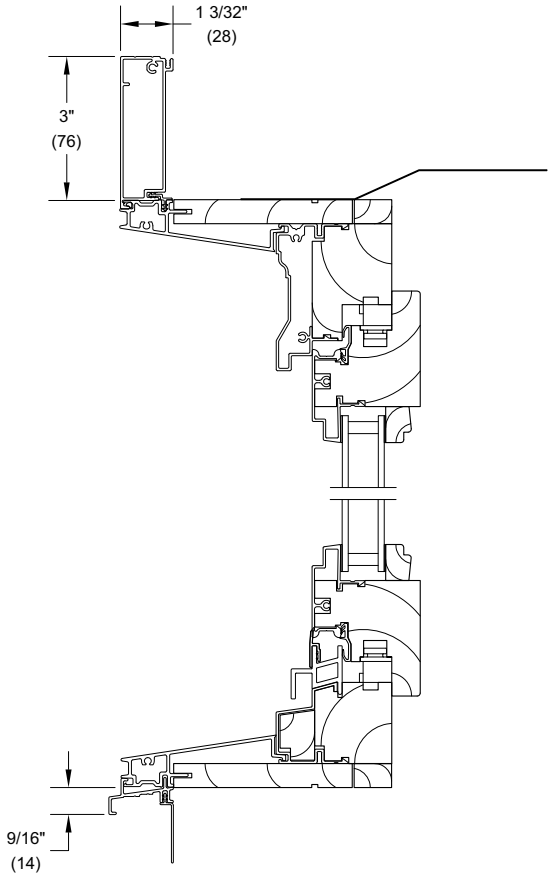

Head Jamb and Sill
with Clad Flat Casing

Section Details: Mullions

Scale: 3" - 1' 0"

Jamb Extension Policy for Multiples Assemblies

To provide the necessary structural integrity for multiple width and height assemblies, 4 9/16" (116) exterior jamb extensions must be applied around the perimeter and between the shortest intermediate mulls.

Total assembly Rough Opening or Masonry Opening must be specified to assure individual unit sizes will be appropriately calculated.

Operating
2 13/32" Jambs

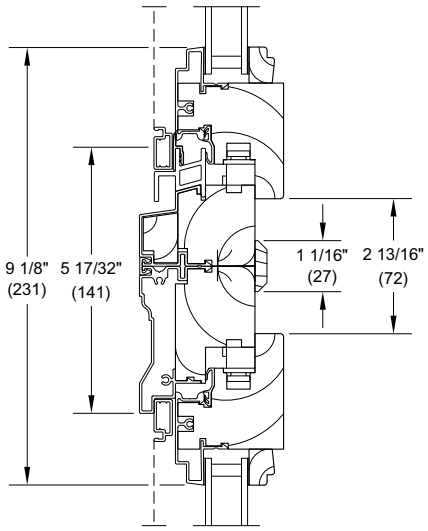

Horizontal Mullion

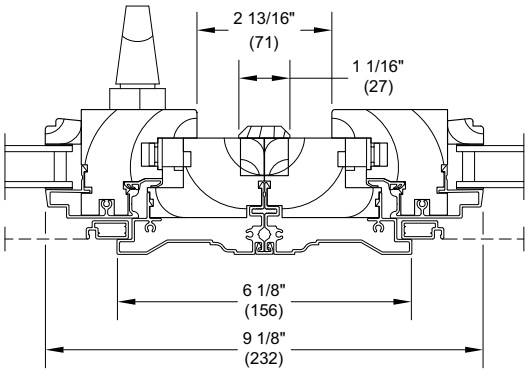

Vertical Mullion

Operating
4 9/16" Jambs

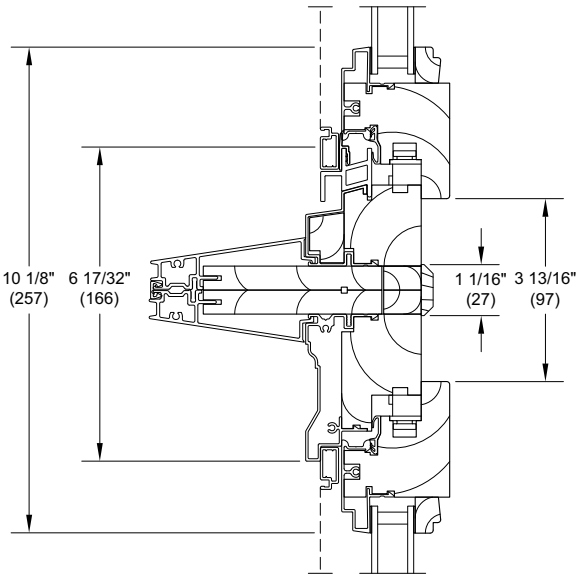

Horizontal Mullion

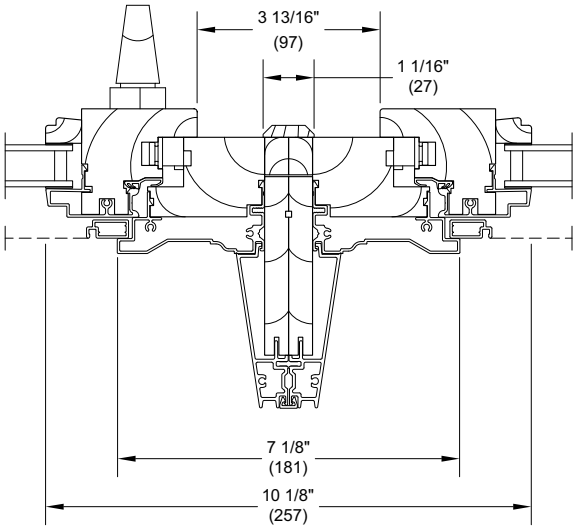

Vertical Mullion

CE Mulling Options will match UCA family mulling rules:

- Mulled assemblies up to 64" (1626) x 71 1/8" (1807) as 1H x multi-width
- Mulled assemblies with 1" (25) LVL or 3/8" (10) aluminum mull reinforcement up to 122" (3099) x 104 1/4" (2648) as a multi-wide or multi-high assembly