2 1/4" Clad Arch Top Swinging French Doors

Standard Unit Measurements and Spring Line Measurements 1
Certified Sizes and Ratings / Minimum Maximum Guidelines 2
Measurement Conversions 3
Net Clear Opening 4
Inswing Section Details: Operating 5
Inswing Section Details: Stationary and Sidelite 6
Inswing Section Details: Casing Options 7
Inswing Section Details: Panel Configurations 8
Inswing Section Details: Ultimate Swinging Screens 9
Inswing Section Details: Flat Panel Placement 10
Inswing Section Details: Raised Panel Placement 11
Outswing Section Details: Operating 12
Outswing Section Details: StormPlus IZ3 / IZ4 13
Outswing Section Details: Stationary and Sidelite 14
Outswing Section Details: Casing Options 15
Outswing Section Details: Panel Configurations 16
Outswing Section Details: Flat Panel Placement 17
Outswing Section Details: Raised Panel Placement 18

Standard Unit Measurements and Spring Line Measurements

Standard Inswing and Outswing Unit Measurements													
Width													
Unit Type	**Call Number**	**Masonry Opening**		**Rough Opening**		**Frame Size**		**Panel OM**		**Daylight Opening**		**Glass Size**	
		ft - in	**mm**	**ft - in**	**mm**	**ft - in**	**mm**	**ft-in**	**mm**	**ft - in**	**mm**	ft-in	mm
1 Panel	2-6	2-7 15/16	(811)	2-8 7/16	(824)	2-7 7/16	(799)	2-5 1/16	(738)	1-5 3/32	(434)	1-6 13/32	(468)
	2-8	2-9 15/16	(862)	2-10 7/16	(875)	2-9 7/16	(849)	2-7 1/16	(789)	1-7 3/32	(485)	1-8 13/32	(518)
	3-0	3-1 15/16	(964)	3-2 7/16	(976)	3-1 7/16	(951)	2-11 1/16	(891)	1-11 3/32	(587)	2-0 13/32	(620)
2 Panel	5-0	5-1 1/8	(1553)	5-1 5/8	(1565)	5-0 5/8	(1540)	2-5 1/16	(738)	1-5 3/32	(434)	1-6 13/32	(468)
	5-4	5-5 1/8	(1654)	5-5 5/8	(1667)	5-4 5/8	(1641)	2-7 1/16	(789)	1-7 3/32	(485)	1-8 13/32	(518)
	6-0	6-1 1/8	(1857)	6-1 5/8	(1870)	6-0 5/8	(1845)	2-11 1/16	(891)	1-11 3/32	(587)	2-0 13/32	(620)
Height													
Unit Type	**Call Number**	**Masonry Opening**		**Rough Opening**		**Frame Size**		**Panel OM**		**Daylight Opening**		**Glass Size**	
		ft - in	**mm**	**ft - in**	**mm**	**ft - in**	**mm**	**ft-in**	**mm**	**ft - in**	**mm**	**ft - in**	**mm**
All Configurations	8-0	7-11 3/4	(2432)	8-0	(2438)	7-11 1/2	(2426)	7-8 1/2	(2350)	6-6 3/8	(1991)	6-7 11/16	(2024)
	10-0	9-11 3/4	(3042)	10-0	(3048)	9-11 1/2	(3035)	9-8 1/2	(2959)	8-6 3/8	(2600)	8-7 11/16	(2634)

RT6 - Spring Line Measurements

RO Radius Width for X = 3 - 4 1/2" (1029)
RO Radius Width for XX = 6- 0 1/2" (1842)

CN	Rough Opening		Rough Opening Springline		Frame Size		Frame Size Springline	
	ft-in	mm	ft-in	mm	ft-in	mm	ft-in	mm
2680	8-0	(2438)	7-8 5/8	(2353)	7-11 1/2	(2426)	7-8 9/32	(2344)
26100	10-0	(3048)	9-8 5/8	(2962)	9-11 1/2	(3035)	9-8 9/32	(2954)
2880	8-0	(2438)	7-8 3/16	(2342)	7-11 1/2	(2426)	7-7 27/32	(2333)
28100	10-0	(3048)	9-8 3/16	(2951)	9-11 1/2	(3035)	9-7 27/32	(2942)
3080	8-0	(2438)	7-7 1/8	(2315)	7-11 1/2	(2426)	7-6 27/32	(2308)
30100	10-0	(3048)	9-7 1/8	(2924)	9-11 1/2	(3035)	9-6 27/32	(2917)
5080	8-0	(2438)	7-5 1/8	(2264)	7-11 1/2	(2426)	7-4 13/16	(2256)
50100	10-0	(3048)	9-5 1/8	(2873)	9-11 1/2	(3035)	9-4 13/16	(2865)
5480	8-0	(2438)	7-4 1/8	(2238)	7-11 1/2	(2426)	7-3 27/32	(2231)
54100	10-0	(3048)	9-4 1/8	(2848)	9-11 1/2	(3035)	9-3 27/32	(2841)
6080	8-0	(2438)	7-1 15/16	(2183)	7-11 1/2	(2426)	7-1 43/64	(2176)
60100	10-0	(3048)	9-1 15/16	(2792)	9-11 1/2	(3035)	9-1 43/64	(2786)

RT2 - Spring Line Measurements

CN	Rough Opening		Rough Opening Springline		Frame Size		Frame Size Springline	
	ft-in	mm	ft-in	mm	ft-in	mm	ft-in	mm
2680	8-0	(2438)	6-7 3/4	(2026)	7-11 1/2	(2426)	6-7 25/32	(2026)
26100	10-0	(3048)	8-7 3/4	(2635)	9-11 1/2	(3035)	8-7 25/32	(2636)
2880	8-0	(2438)	6-6 3/4	(2000)	7-11 1/2	(2426)	6-6 25/32	(2001)
28100	10-0	(3048)	8-6 3/4	(2610)	9-11 1/2	(3035)	8-6 25/32	(2611)
3080	8-0	(2438)	6-4 3/4	(1949)	7-11 1/2	(2426)	6-4 25/32	(1950)
30100	10-0	(3048)	8-4 3/4	(2559)	9-11 1/2	(3035)	8-4 25/32	(2560)
5080	8-0	(2438)	5-5 3/16	(1656)	7-11 1/2	(2426)	5-5 3/16	(1656)
50100	10-0	(3048)	7-5 3/16	(2265)	9-11 1/2	(3035)	7-5 3/16	(2265)
5480	8-0	(2438)	5-3 3/16	(1605)	7-11 1/2	(2426)	5-3 3/16	(1605)
54100	10-0	(3048)	7-3 3/16	(2215)	9-11 1/2	(3035)	7-3 3/16	(2215)
6080	8-0	(2438)	4-11 3/16	(1503)	7-11 1/2	(2426)	4-11 3/16	(1503)
60100	10-0	(3048)	6-11 3/16	(2113)	9-11 1/2	(3035)	6-11 3/16	(2113)

Certified Sizes and Ratings / Minimum Maximum Guidelines

Certified Sizes and Ratings - 2 1/4" Inswing French Door with Multi-Point and Adjustable Hinges				
Panel Height	Number of Panels	Panel Call Number		
		2-6	2-8	3-0
8-0	1	LC-PG55-SHD	LC-PG55-SHD	LC-PG55-SHD
10-0	1	LC-PG55-SHD	LC-PG55-SHD	LC-PG55-SHD
8-0	2	LC-PG55-SHD	LC-PG55-SHD	LC-PG55-SHD
10-0	2	LC-PG55-SHD	LC-PG55-SHD	LC-PG55-SHD

NOTE: For CE ratings, please refer to CE Performance chapter.

Certified Sizes and Ratings - Ultimate Outswing French Door IZ3 with Multi-Point and Adjustable Hinges				
Panel Height	Number of Panels	Panel Call Number		
		2-6	2-8	3-0
8-0	1	LC-PG55-SHD	LC-PG55-SHD	LC-PG55-SHD
10-0	1	LC-PG55-SHD	LC-PG55-SHD	LC-PG55-SHD
8-0	2	LC-PG55-SHD	LC-PG55-SHD	LC-PG55-SHD
10-0	2	LC-PG55-SHD	LC-PG55-SHD	LC-PG55-SHD

Certified Sizes and Ratings - Ultimate Outswing French Door IZ4 with Multi-Point and Adjustable Hinges				
Panel Height	Number of Panels	Panel Call Number		
		2-6	2-8	3-0
8-0	1	LC-PG65-SHD	LC-PG65-SHD	LC-PG65-SHD
10-0	1	LC-PG65-SHD	LC-PG65-SHD	LC-PG65-SHD
8-0	2	LC-PG65-SHD	LC-PG65-SHD	LC-PG65-SHD
10-0	2	LC-PG65-SHD	LC-PG65-SHD	LC-PG65-SHD

NOTE: Impact rated products not available with CE mark.

Minimum and Maximum Guidelines								
Unit Configurations	Frame Size							
	Min Width		Min Height		Max Width		Max Height	
	in	mm	in	mm	in	mm	in	mm
1 - Panel Operater	21 9/16	(548)	70 5/16	(1786)	43 7/16	(1103)	119 1/2	(3035)
2 - Panel Operator	40 7/8	(1038)	70 5/16	(1786)	84 5/8	(2149)	119 1/2	(3035)

Measurement Conversions

Unit Measurements Conversions		Width				Height	
From	**To**						
Rough Opening		**in**	**mm**			**in**	**mm**
OM of Frame	Rough Opening	+ 1	(25)			+ 1/2	(13)
Masonry Opening	Rough Opening	+ 1/2	(13)			+ 1/4	(06)
Masonry Opening w/BMC	Rough Opening	-2 1/8	(54)			-1 1/16	(27)
Operating Panel		**in**	**mm**			**in**	**mm**
OM of Frame	OM of Panel (x1)	-2 3/8	(60)			-3	(76)
OM of Frame	OM of Panel (x2)	-2 1/2	(64)	÷	2	-3	(76)
Daylight Opening	OM of Panel	+ 11 31/32	(304)			+ 14 1/8	(359)
Glass		**in**	**mm**			**in**	**mm**
Daylight Opening	Glass	+ 1 5/16	(33)			+ 1 5/16	(33)

NOTE: 1-Panel Standard R.O. Radius 40 1/2" (1029) *2-Panel Standard R.O. Radius 72 1/2"* (1842)

Net Clear Opening

Scale: 1 1/2" = 1'

Net Clear Opening 2 1/4" Inswing French Door Width			
Unit Type	Call Number	Net Clear Openings	
		ft-in	mm
1 Panel	2-6	2-1 15/32	(647)
	2-8	2-3 15/32	(698)
	3-0	2-7 15/32	(799)
2 Panel	5-0	4-4 3/16	(1325)
	5-4	4-8 3/16	(1427)
	6-0	5-4 3/16	(1630)
Height			
Unit Type	Call Number	Net Clear Openings	
		ft - in	mm
All Configurations At Springline	8-0	7-7 23/32	(2329)
	10-0	9-7 23/32	(2939)

Net Clear Opening 2 1/4" Outswing French Door Width			
Unit Type	Call Number	Net Clear Openings	
		ft-in	mm
1 Panel	2-6	2-1 15/32	(647)
	2-8	2-3 15/32	(698)
	3-0	2-7 15/32	(799)
2 Panel	5-0	4-4 3/16	(1325)
	5-4	4-8 3/16	(1427)
	6-0	5-4 3/16	(1630)
Height			
Unit Type	Call Number	Net Clear Openings	
		ft - in	mm
All Configurations At Springline	8-0	7-8 1/8	(2340)
	10-0	9-8 1/8	(2950)

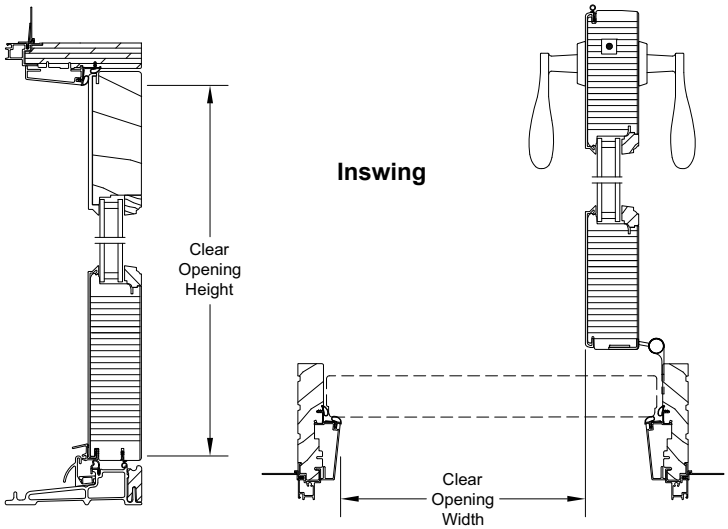

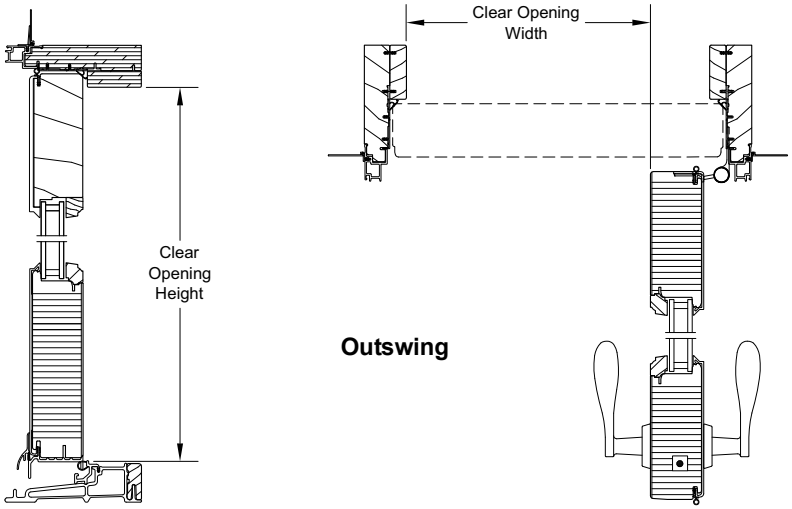

Inswing Section Details: Operating

Scale: 3" = 1' 0"

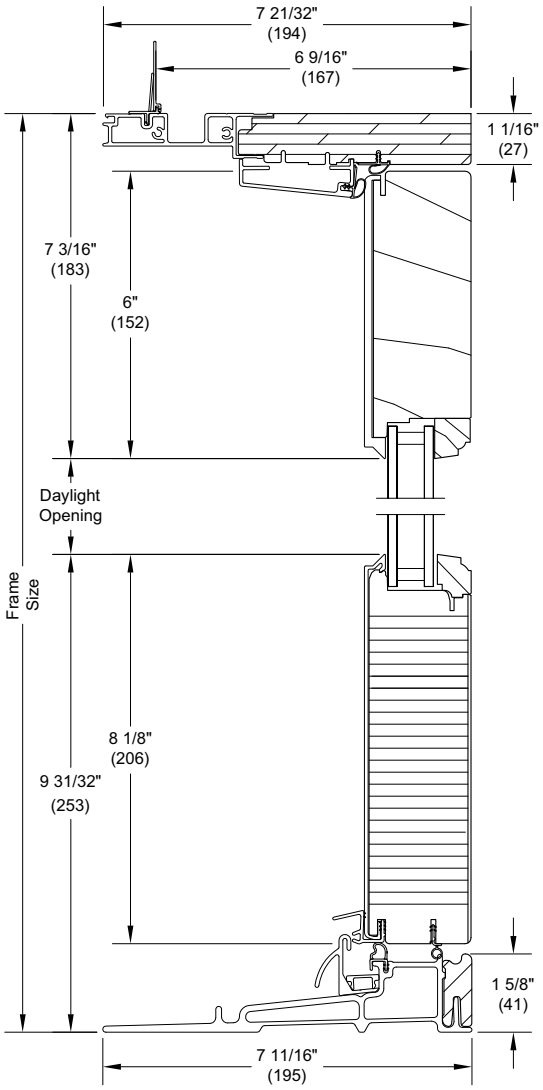

Head Jamb and Sill

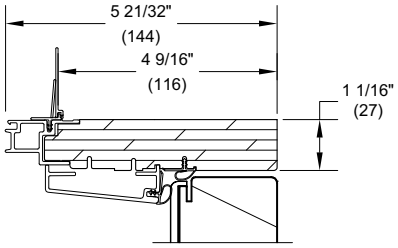

4 9/16" Head Jamb

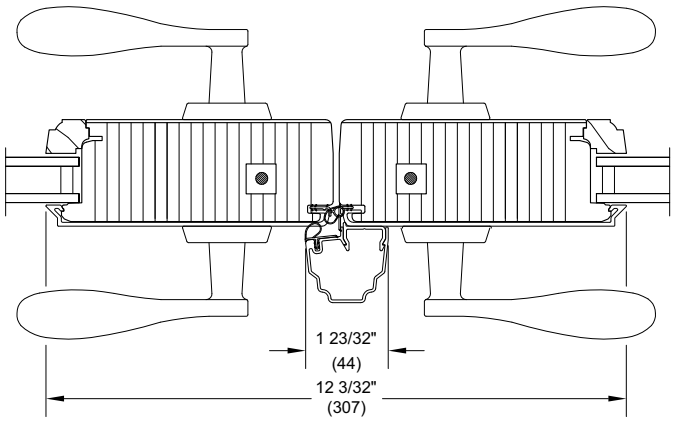

XX L Meeting Stiles

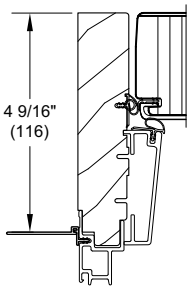

4 9/16" Jamb
RT2

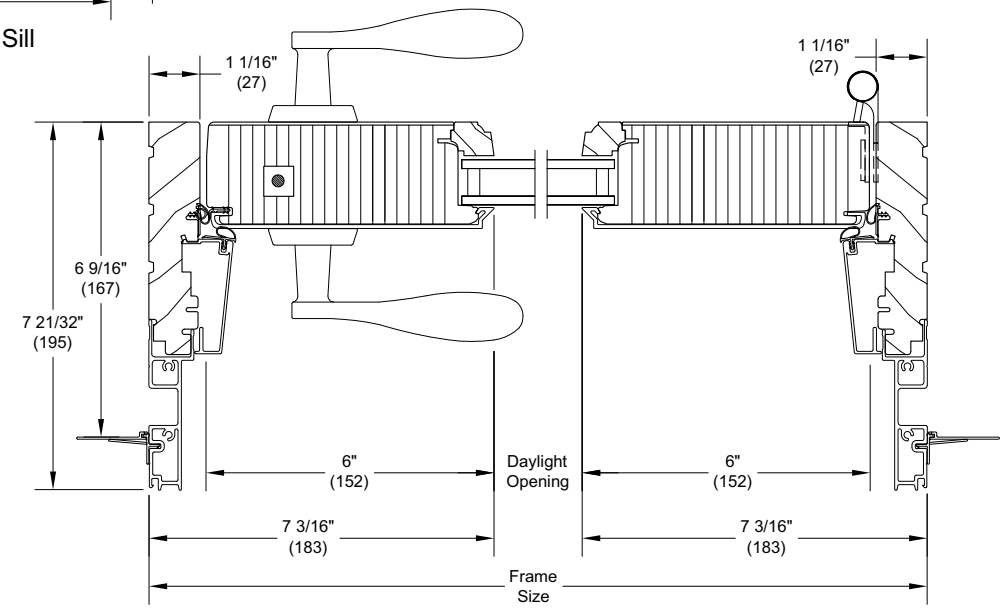

X R Jamb - RT6

Inswing Section Details: Stationary and Sidelite

Scale: 3" = 1' 0"

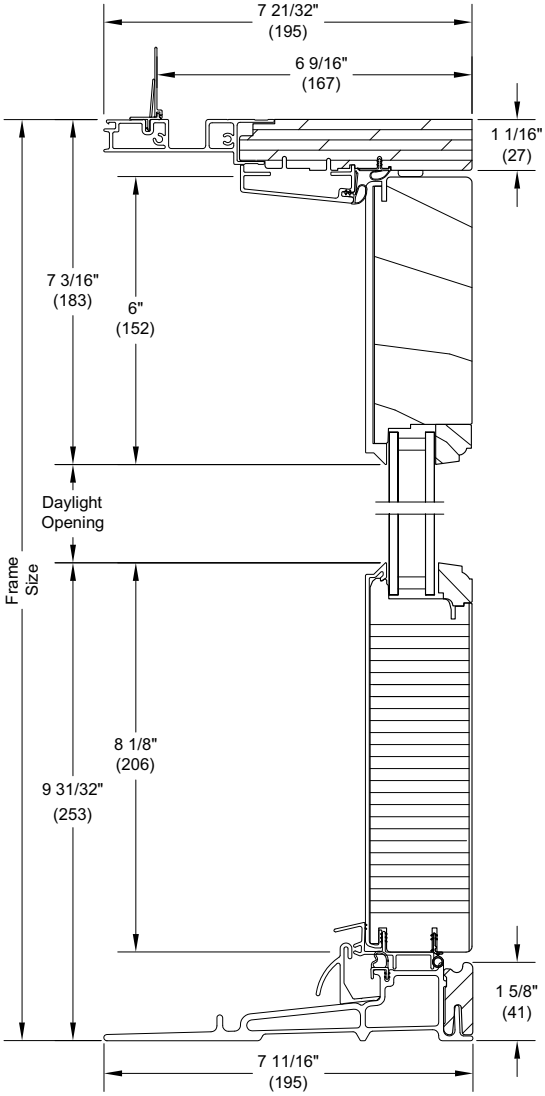

Head Jamb and Sill

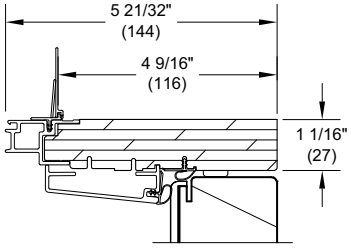

4 9/16" Head Jamb

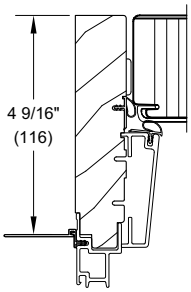

4 9/16" Jamb
RT2

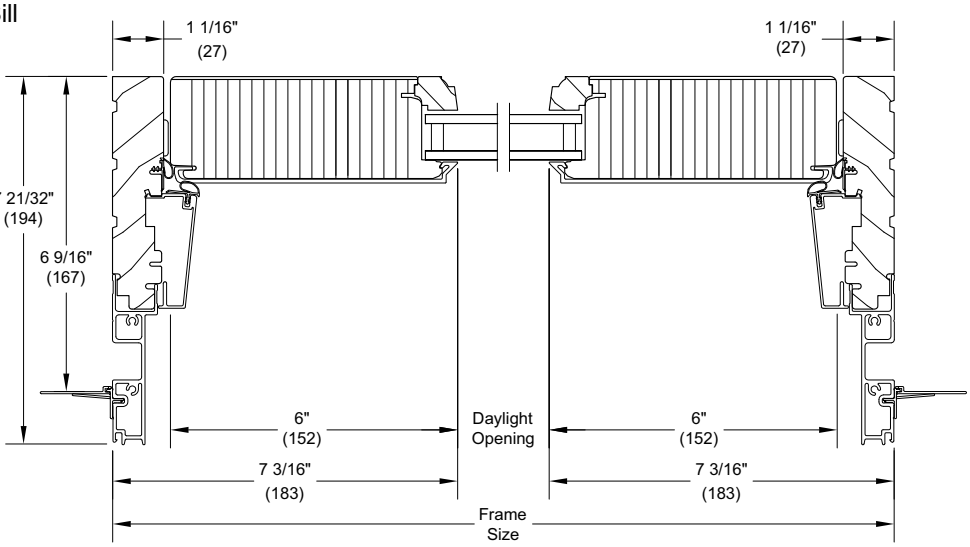

O Jamb - RT6

Inswing Section Details: Casing Options

Scale: 3" = 1' 0"

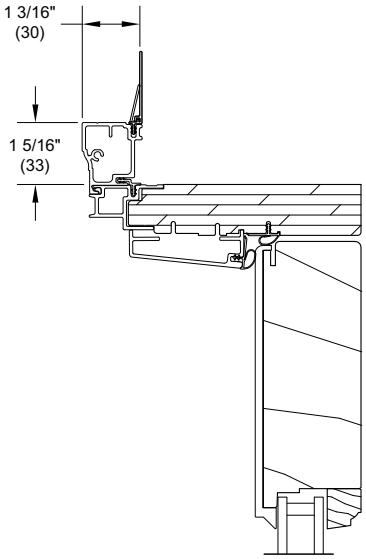

4 9/16" Head Jamb with
Clad Brick Mould Casing

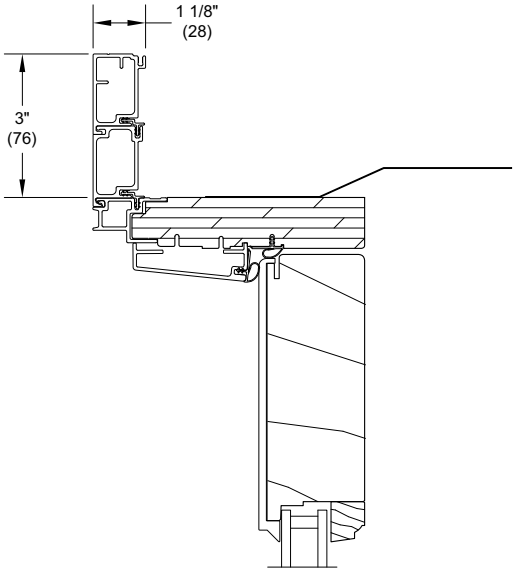

4 9/16" Head Jamb with
Clad Flat Casing

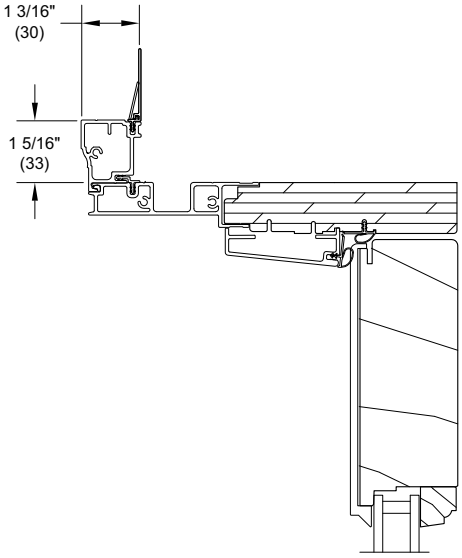

6 9/16" Head Jamb with
Clad Brick Mould Casing

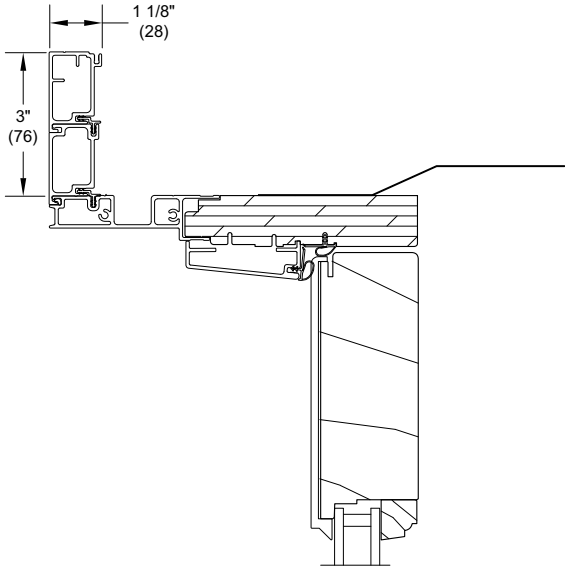

6 9/16" Head Jamb with
Clad Flat Casing

Inswing Section Details: Panel Configurations

Not to Scale

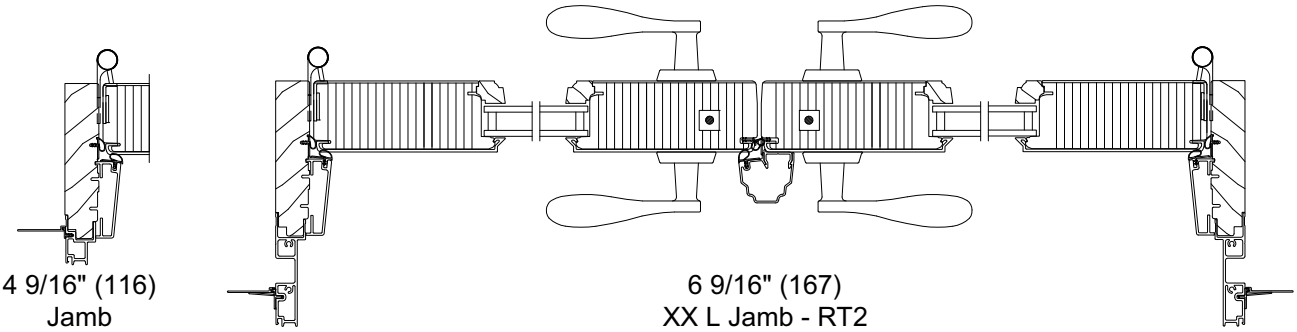

4 9/16" (116)
Jamb

6 9/16" (167)
XX L Jamb - RT2

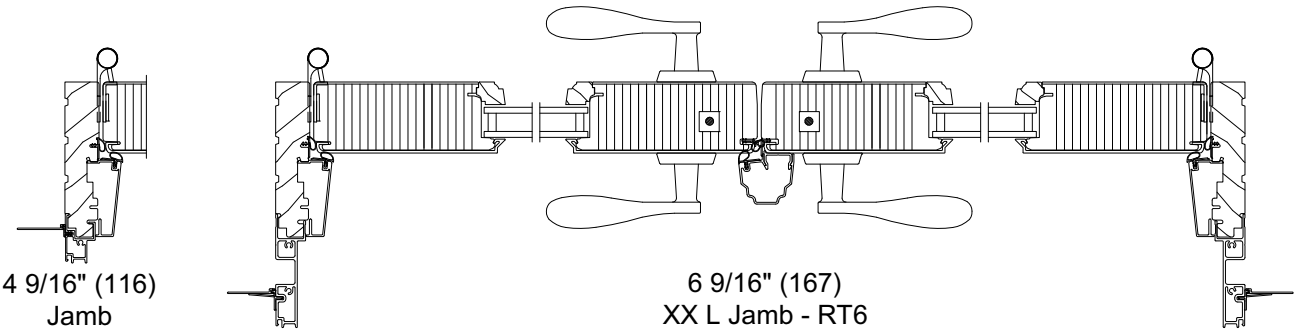

4 9/16" (116)
Jamb

6 9/16" (167)
XX L Jamb - RT6

Inswing Section Details: Ultimate Swinging Screens

Not to Scale

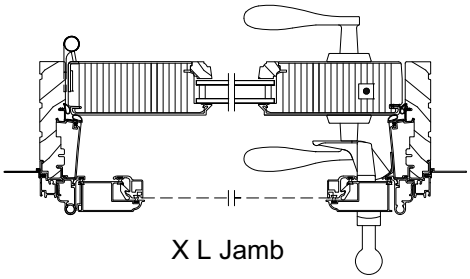

X L Jamb

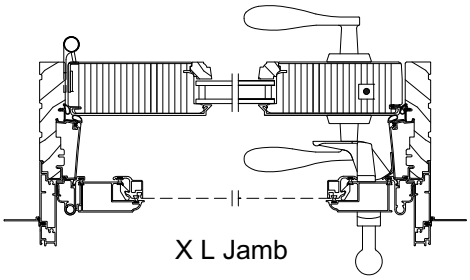

X L Jamb

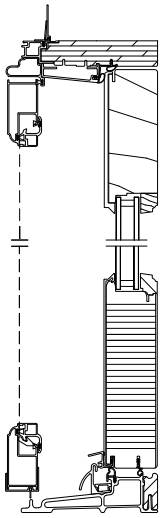

4 9/16" Head
Jamb and Sill

Inswing Section Details: Flat Panel Placement

Scale: 3" = 1' 0"

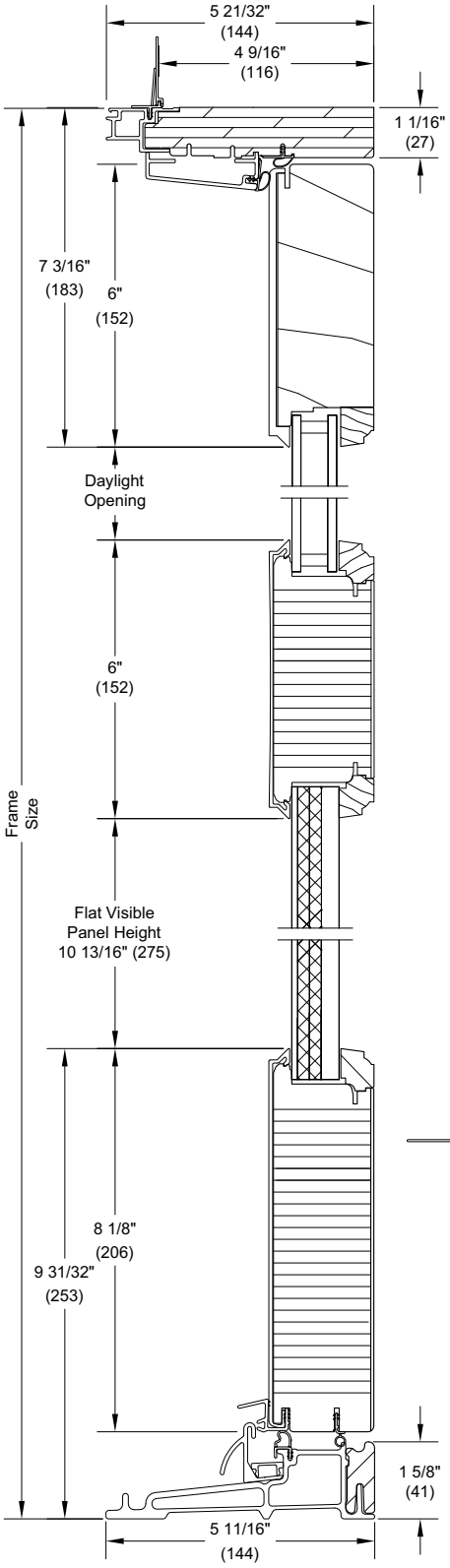

Head Jamb and Sill

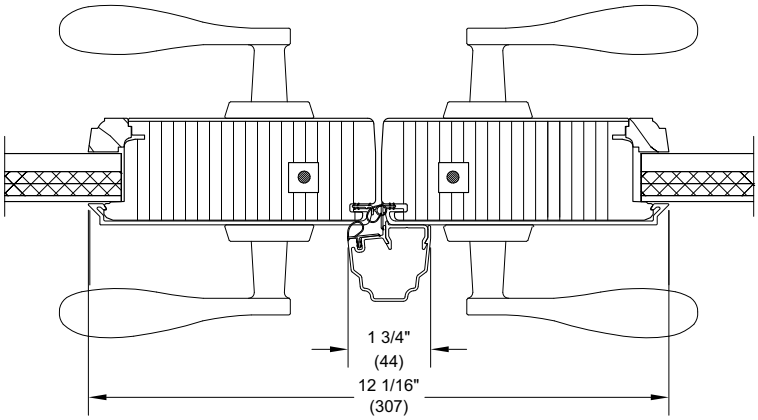

XX L Meeting Stiles

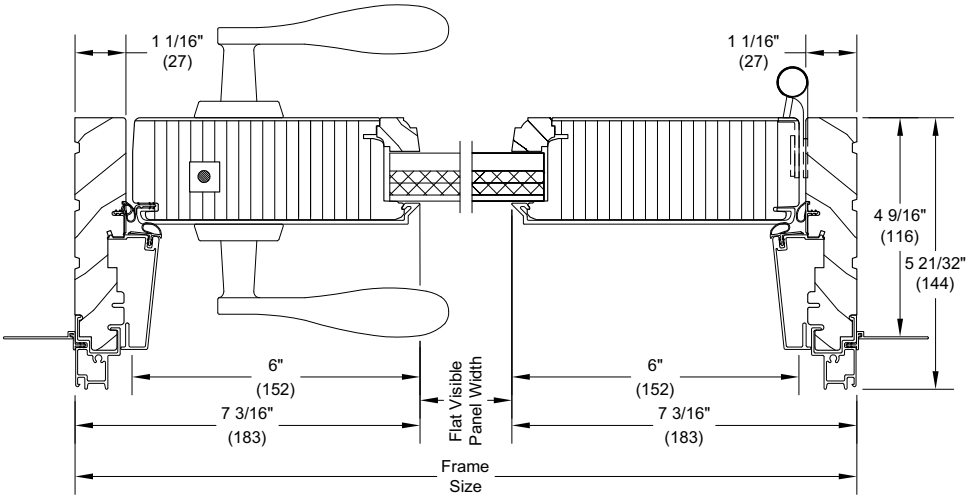

X R Jamb - RT6

NOTE: 2 1/4" Clad Ultimate Arch Top Inswing French Door with flat panels are not available with CE mark.

Inswing Section Details: Raised Panel Placement

Scale: 3" = 1' 0"

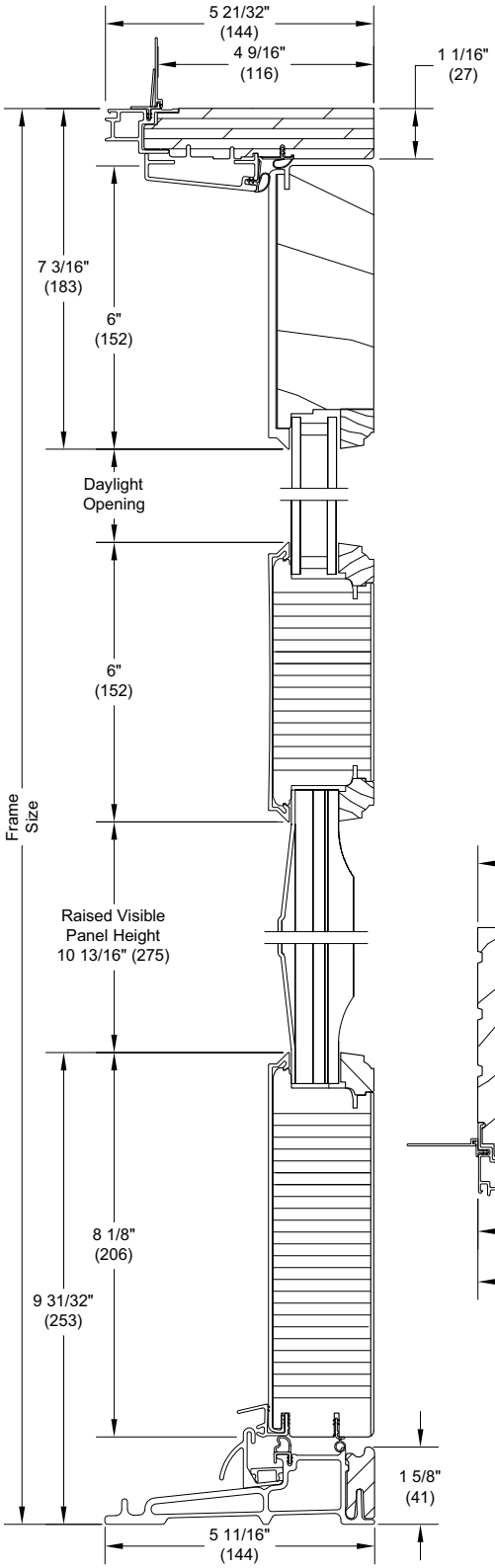

Head Jamb and Sill

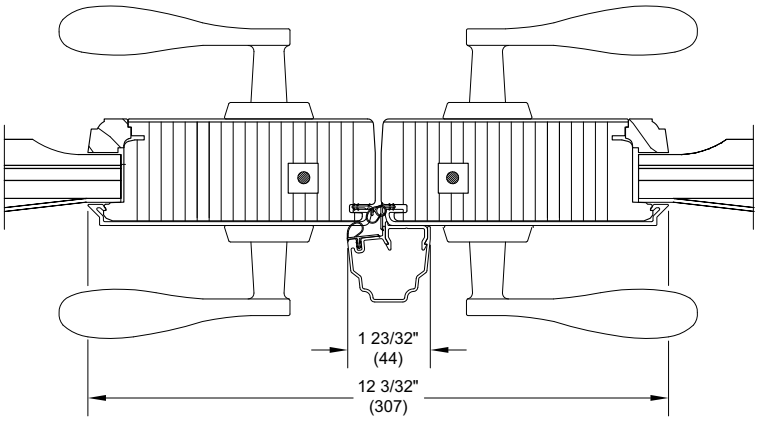

XX L Meeting Stiles

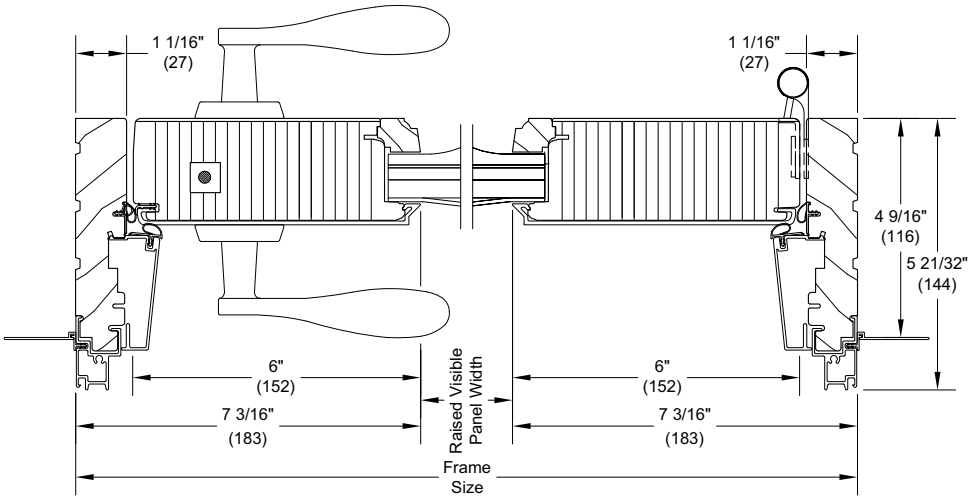

X R Jamb - RT6

NOTE: 2 1/4" Clad Ultimate Arch Top Inswing French Door with raised panels are not available with CE mark.

Outswing Section Details: Operating

Scale: 3" = 1' 0"

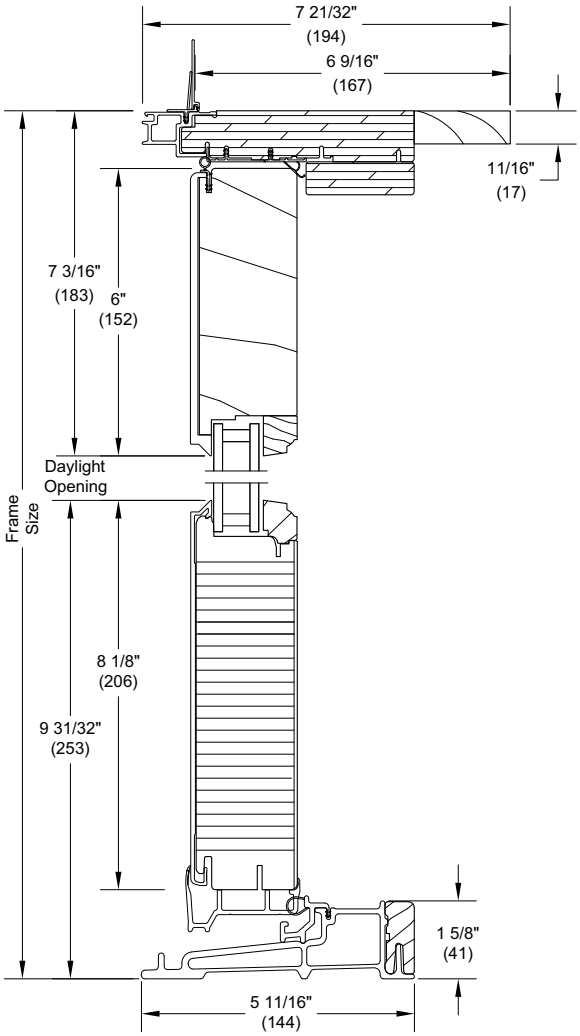

Head Jamb and Sill

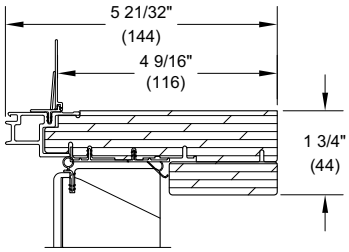

4 9/16" Head Jamb

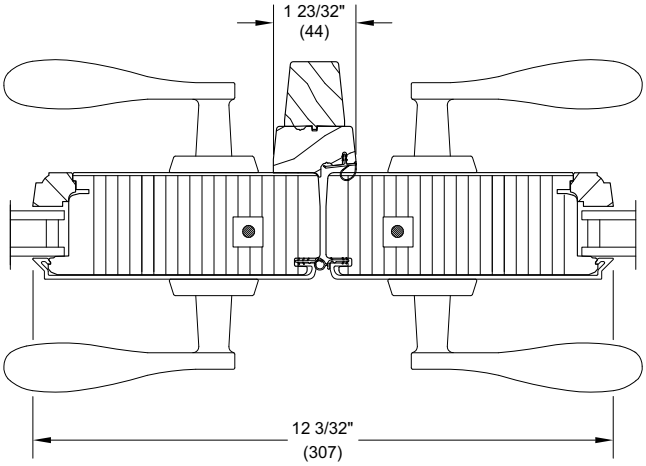

XX L - Meeting Stiles

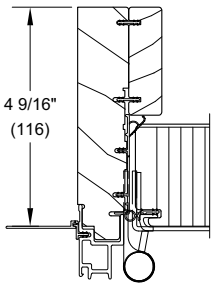

4 9/16" Jamb
RT2 & RT6

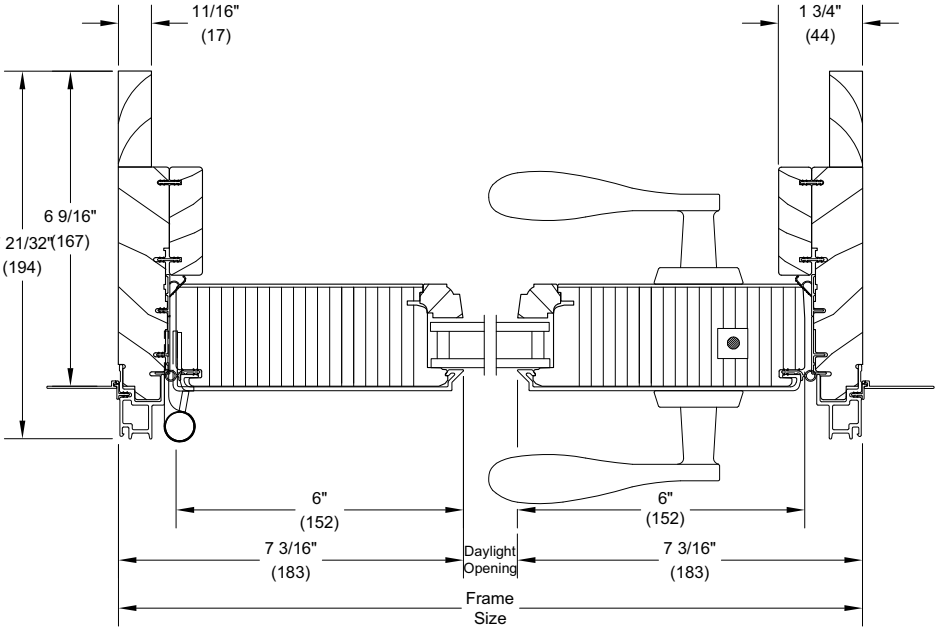

X R - Jamb - RT2 & RT6

Outswing Section Details: StormPlus IZ3 / IZ4

Scale: 3" = 1' 0"

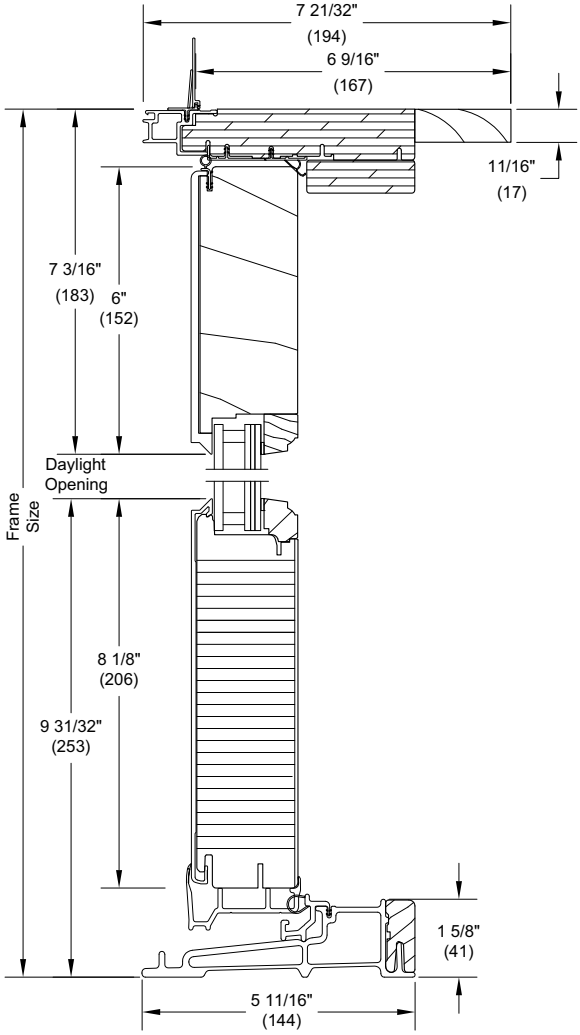

Head Jamb and Sill

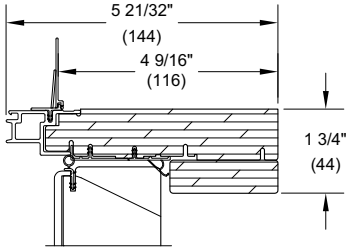

4 9/16" Head Jamb

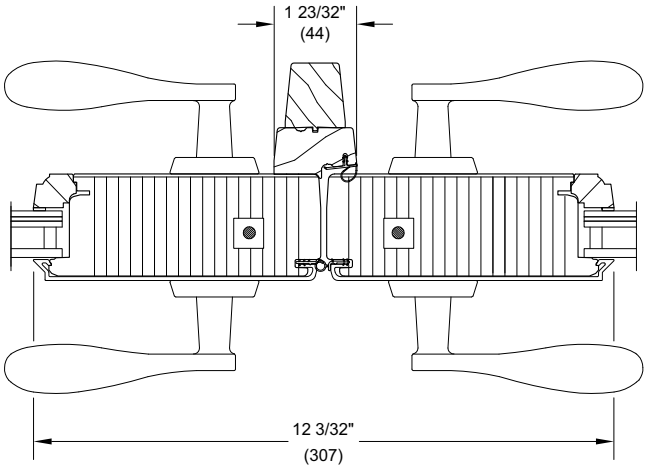

XX L - Meeting Stiles

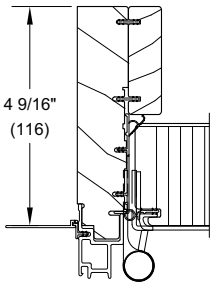

4 9/16" Jamb
RT2 & RT6

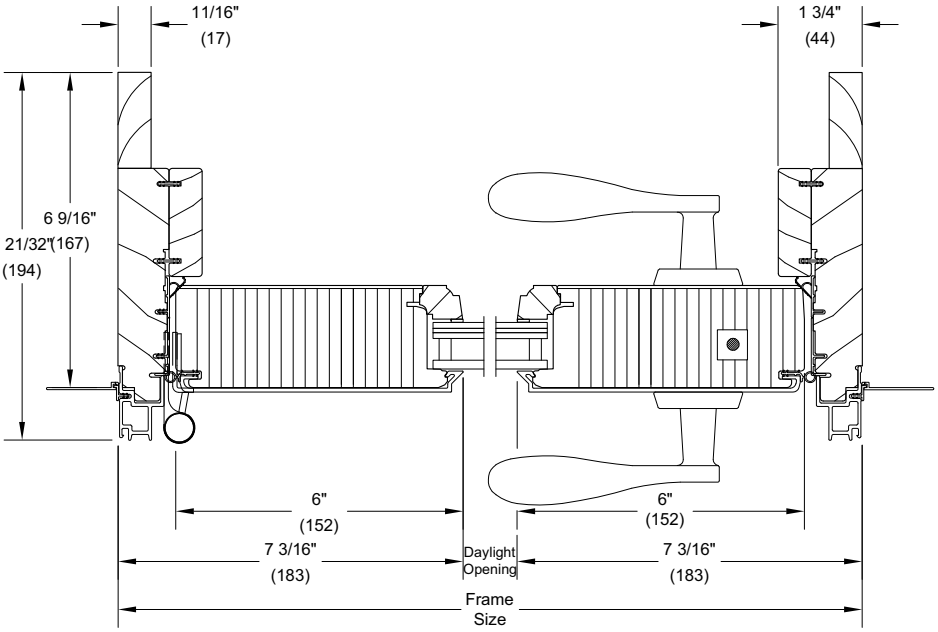

X R - Jamb - RT2 & RT6

NOTE: Impact rated products not available with CE mark.

Outswing Section Details: Stationary and Sidelite

Scale: 3" = 1' 0"

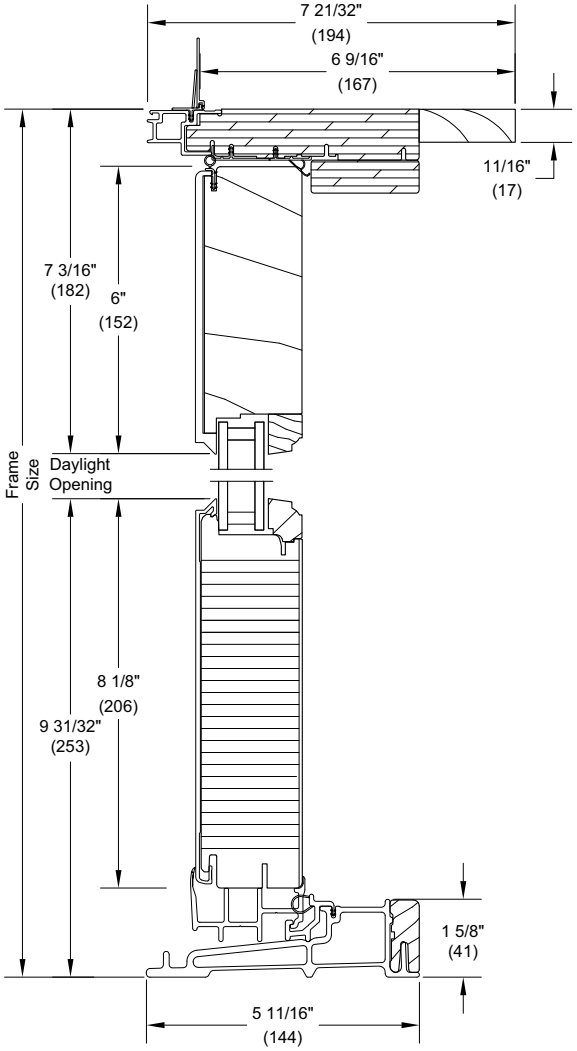

Head Jamb and Sill

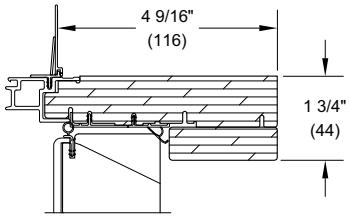

4 9/16" Head Jamb

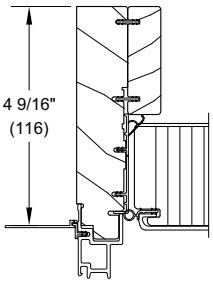

4 9/16" Jamb

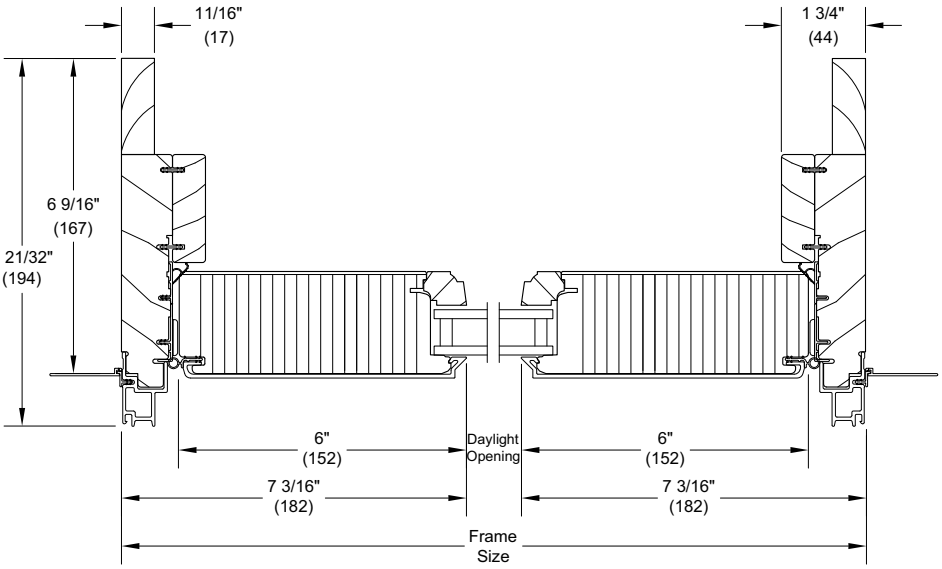

O - Jamb - RT2 & RT6

Outswing Section Details: Casing Options

Scale: 3" = 1' 0"

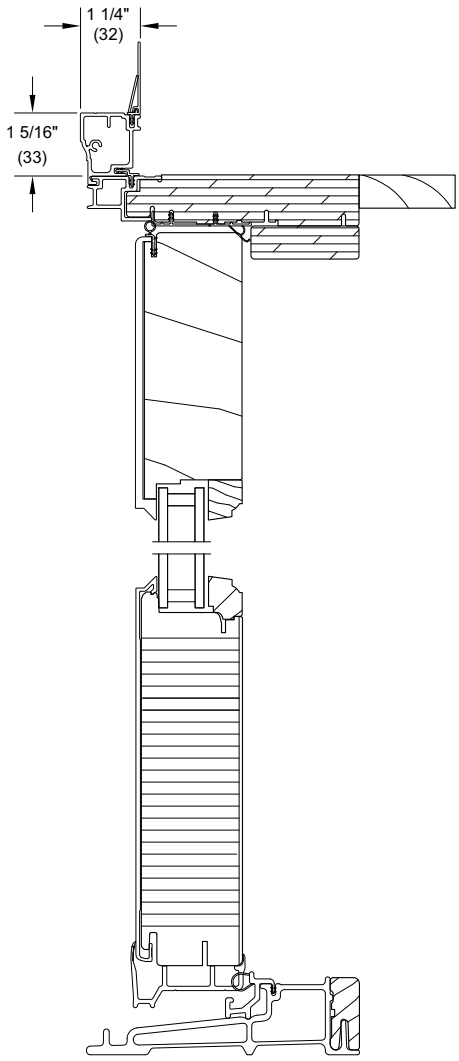

Head Jamb and Sill
with Clad Brick Mould Casing
6 9/16" Jamb Depth

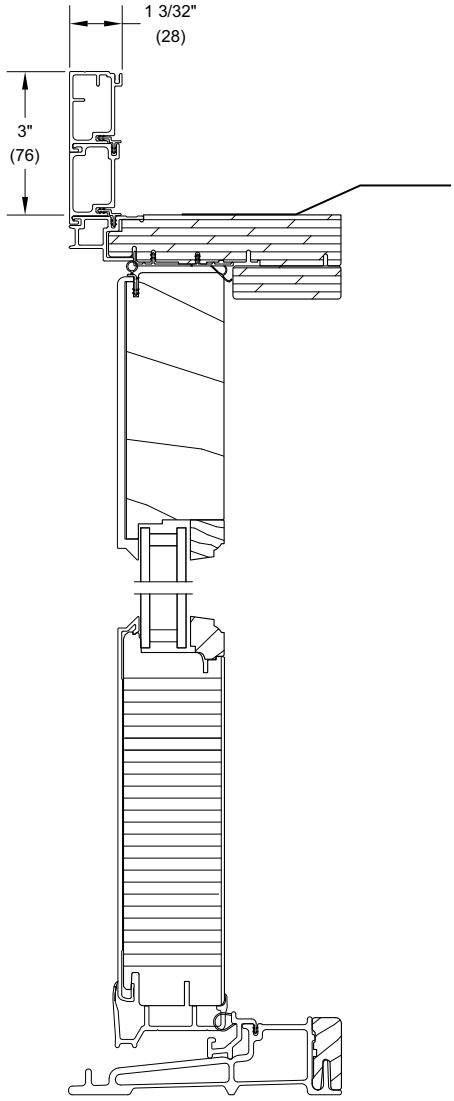

Head Jamb and Sill
with Clad Flat Casing
4 9/16" Jamb Depth

Outswing Section Details: Panel Configurations

Not to Scale

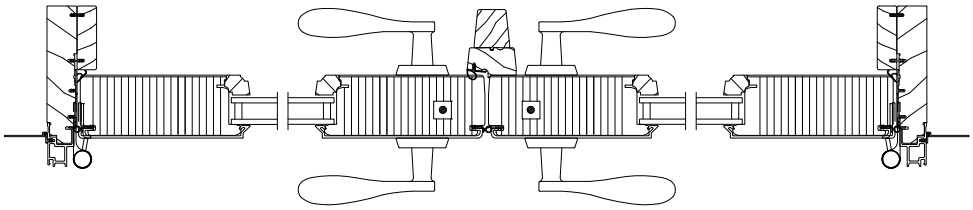

XX R - 4 9/16" Jamb - RT2 & RT6

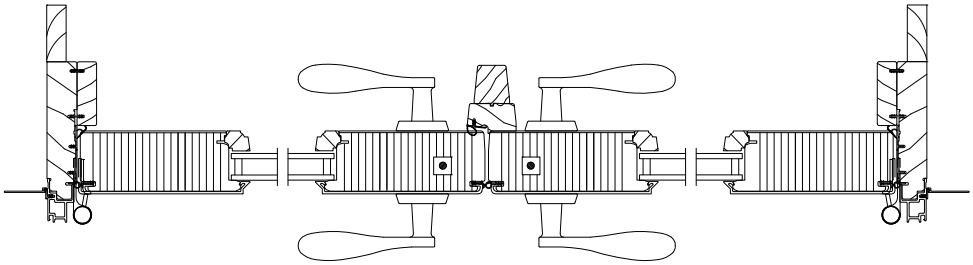

XX R - 6 9/16" Jamb - RT2 & RT6

Outswing Section Details: Flat Panel Placement

Scale: 3" = 1' 0"

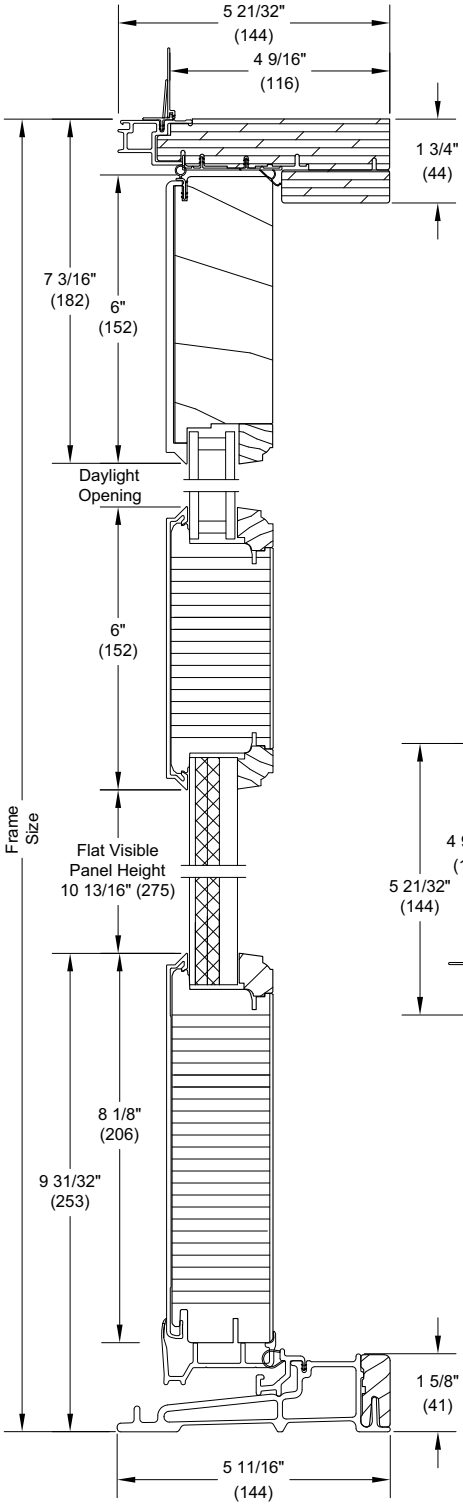

Head Jamb and Sill

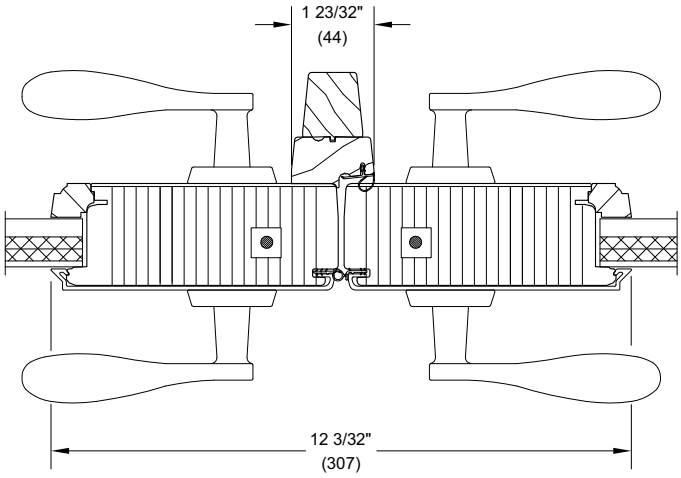

XX L - Meeting Stiles

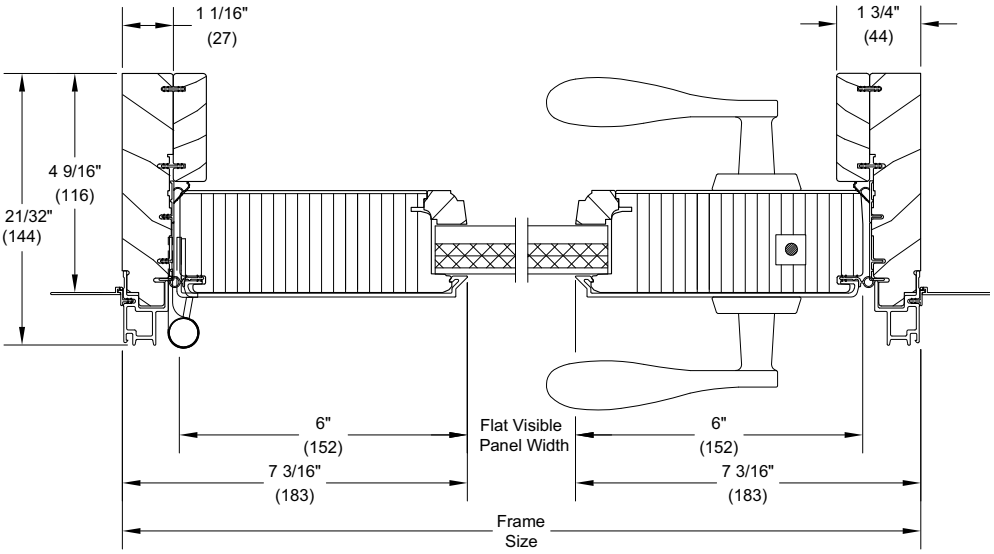

X R - Jamb - RT2 & RT6

NOTE: 2 1/4" Clad Ultimate Arch Top Outswing French Door with flat panels are not available with CE mark.

2 1/4" Clad Arch Top Swinging French Doors

Outswing Section Details: Raised Panel Placement

Scale: 3" = 1' 0"

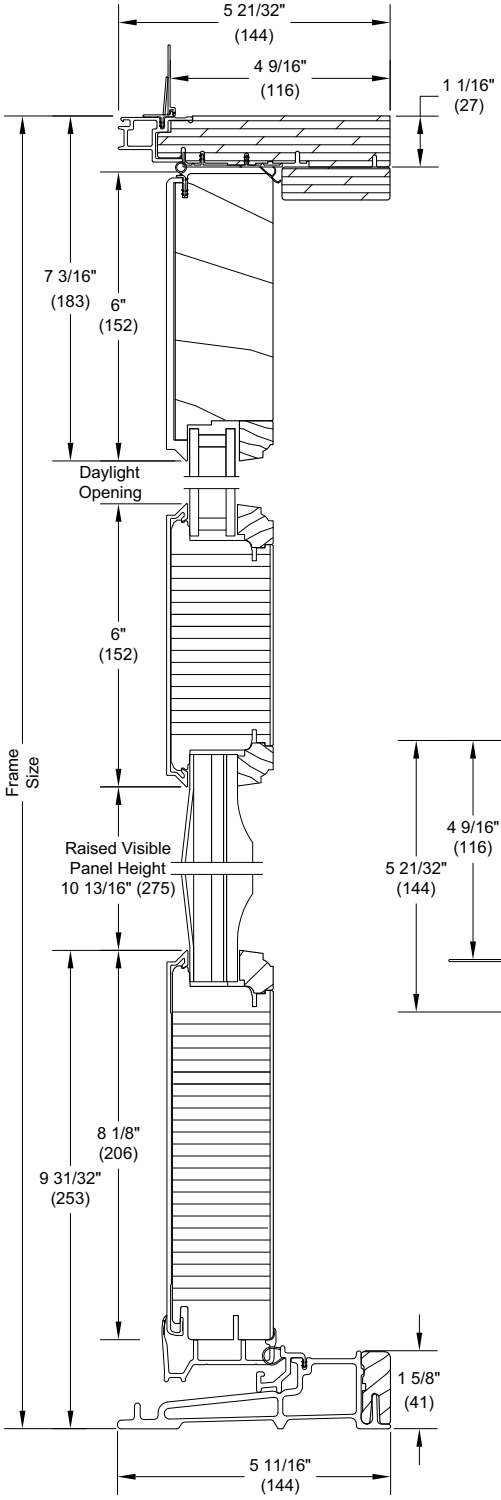

Head Jamb and Sill

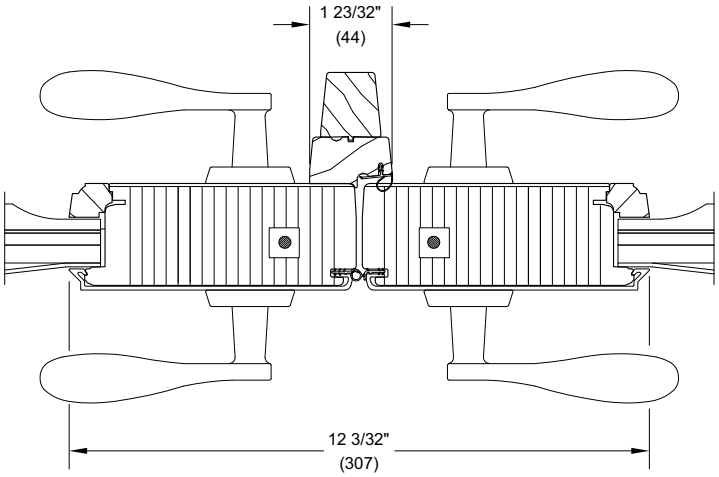

XX L - Meeting Stiles

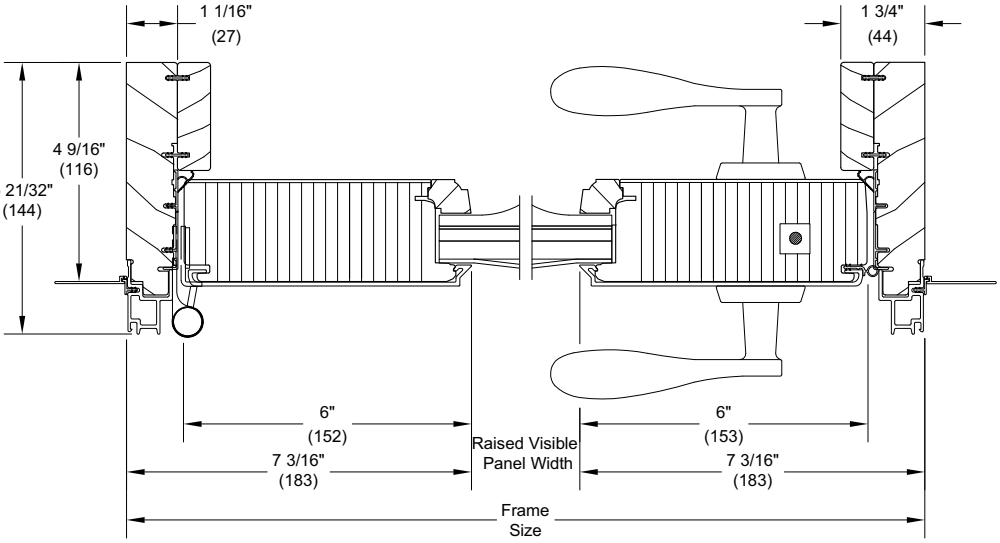

X R - Jamb - RT2 & RT6

NOTE: 2 1/4" Clad Ultimate Arch Top Outswing French Door with raised panels are not available with CE mark.