CHAPTER 8

INTEGRITY SLIDING PATIO DOOR (ISPD)

Table of Contents

	PAGE
History	8.2
Part Identification – Two Panel Operator	8.4
Part Identification – Three Panel Operator	8.5
Parts	
Hardware	8.6
Miscellaneous	8.8
Vinyl and Aluminum	8.9
Weather Strip and Vinyl	8.11
Wood Parts	8.13
Panel Replacement	8.16
Grille Replacement	8.17
Screens and Screen Parts	8.18
Obsolete Parts	
Obsolete Parts	8.21
3/1/04 Door Resizing – Pre 3/2004	8.23
Service	
Screen Adjustment	8.24
Screen Removal – Current	8.25
Screen Replacement – Current	8.26
Panel Adjustment	8.27
Keeper Adjustment/Removal	8.27
Mortise Lock Adjustment/Removal	8.28
Operating Panel Removal	8.29
Stationary Panel Removal/Installation for OX, XO and OXO Configurations	8.30
Handle Installation/Replacement	8.32
Sill Cap Replacement	8.33
Interlock Replacement	8.34
Installing Operator Panel Stop Blocks	8.36
Installing Door Stops (3W OOX and XOO Configurations)	8.36
Removing Excessive Thumb Turn Play	8.37
Obsolete Service	
Screen Adjustment – Pre 5/6/03	8.38
Screen Removal – Pre 5/6/03	8.39
Screen Replacement – Pre 5/6/03	8.39
Operating Panel Removal/Installation – Pre 11/03	8.40

ATTENTION:

- Note: For door transom information see Chapter 6 Round Top/Polygon.
- Specification and technical data are subject to change without notice.
- Numbers listed in parentheses ( ) are metric equivalents in millimeters rounded to the nearest whole number.

PRODUCED	UNIT TYPE	FEATURES OR CHANGES	DISCONTINUED
January 1997	Patio Door	Unit features 3/4″ insulating Low E II tempered glass with Argon, mortise style locking system, stainless steel ball bearing twin roller operating system, exterior non–keyed handle and wood interior handle.	Present
		Pultruded fiberglass (Ultrex) exterior available in white or pebble gray, oak sill liner and color matched top hung screen. Available in 5065, 6065 retro, 5068 and 6068 sizes.	Arctic White – Feb. 2002
July 1997	Patio Door	Added 9068 unit size to the product line available in XOO, OOX, or OXO configurations.	Present
		Changed operator panel guide profile W7625, replaced with W7710.	November 2003
		Changed head jamb liner profile W7624, replaced with W7709.	November 2003
		Changed panel guide fastener profile V015, replaced with V016.	November 2003
		Changed operator panel interlock weatherstrip height.	Present
September 1997	Patio Door	Introduced white grilles–between–the–glass (GBG) simulated divided lite option.	Present
		Direct glaze transoms offered for 6068 patio door.	Present
October 1997	Patio Door	Elliptical Round Top transom offered for 6068 patio door.	Present
May 1998	Patio Door	Eliminated use of metal angle bracket to anchor the stationary panel to the sill. Redesigned leveling block end cap with a built in weep system.	Present
November 1998	Patio Door	Introduced white hardware as an option for interior handle.	Present
December 2000	Patio Door	6 13/16″ jamb extension available factory applied. 5 5/16″ jamb extension no longer available.	Present
March 2001	Patio Door	Added white interior finish.	Present
April 2001	Patio Door	Interior handle change from wood to brass plated.	Present
February 2002	Patio Door	Stone White replacing Arctic White as a standard color effective Feb. 4. Arctic White replacement parts available through the warranty period.	Present
February 2002	Patio Door	New profile for white screens effective Feb. 4, handle available through the warranty period. New profile uses existing roller bar (A213) and head jamb screen track (A214).	May 2003
August 2002	Patio Door	Thumb turn design improved to eliminate excessive play, effective 8/15/2002.	Present
May 2003	Patio Door	Pebble and Stone White screens now both use new screen profile. A213 roller bar and A214 head jamb screen track now obsolete. Replaced with integral roller bar on panel and A1237 head jamb screen track. Effective 5/6/03. See Screen and Screen Parts section for more details.	Present
November 2003	Patio Door	W7710 Panel Guide , W7709 Head Jamb Liner , and V016 Panel Guide Connector (replaced with new W8565 Head Jamb Liner, A1223 Aluminum Panel Guide Fastener, and W8566 Panel Guide. Effective 11/24/03.	Present
March 2004	Sliding Patio Door	Standard 6–0 door width changed from 73″ opening to 72″ opening. Effective 3/1/04.	Present
January 2005	Sliding Patio Door	Added two interior hardware finishes: White and Almond Frost, to interior handles. Effective 1/17/05.	
July 2006	Sliding Patio Door	SDL offered on all Wood/Ultrex Series windows and doors. 7/8″ wide bars with Ultrex exterior and wood interior. See Product Bulletin 66 for more details.	Present
September 2006	Sliding Patio Door	Prairie SDL and GBG Lite cuts made available for the Wood/Ultrex Series windows and doors. See Product Bulletin 70 for more details.	Present

PRODUCED	UNIT TYPE	FEATURES OR CHANGES	DISCONTINUED
March 2007	Sliding Patio Door	Added Bronze exteriors and Bronze handles.	Present
November 2007	Sliding Patio Door	Added Evergreen exteriors.	Present
March 2008	Sliding Patio Door	Cashmere exteriors introduced March 17, 2008.	Present
July 2008	Sliding Patio Door	Cottage SDL lite cut made available for Wood–Ultrex. Refer to product bulletin #99.	Present
May 2009	Sliding Patio Door	LoE^3 366™ glass option introduced.	Present
July 2009	Sliding Patio Door	Interior/Exterior Handle design change with AF as the default finish. Other finishes available are WH, BS PVD, SN PVD and ORBZ PVD.	Present
January 2010	Sliding Patio Door	Introduced new grille tack and installation tool and added to accessory chapter.	Present
February 2011	Sliding Patio Door	Introduced keyed option for complete handle sets.	Present
August 2012	Sliding Patio Door	August 27, 2012: Introduced Wood–Ultrex Ebony exterior and exterior casing options.	Present

PART IDENTIFICATION

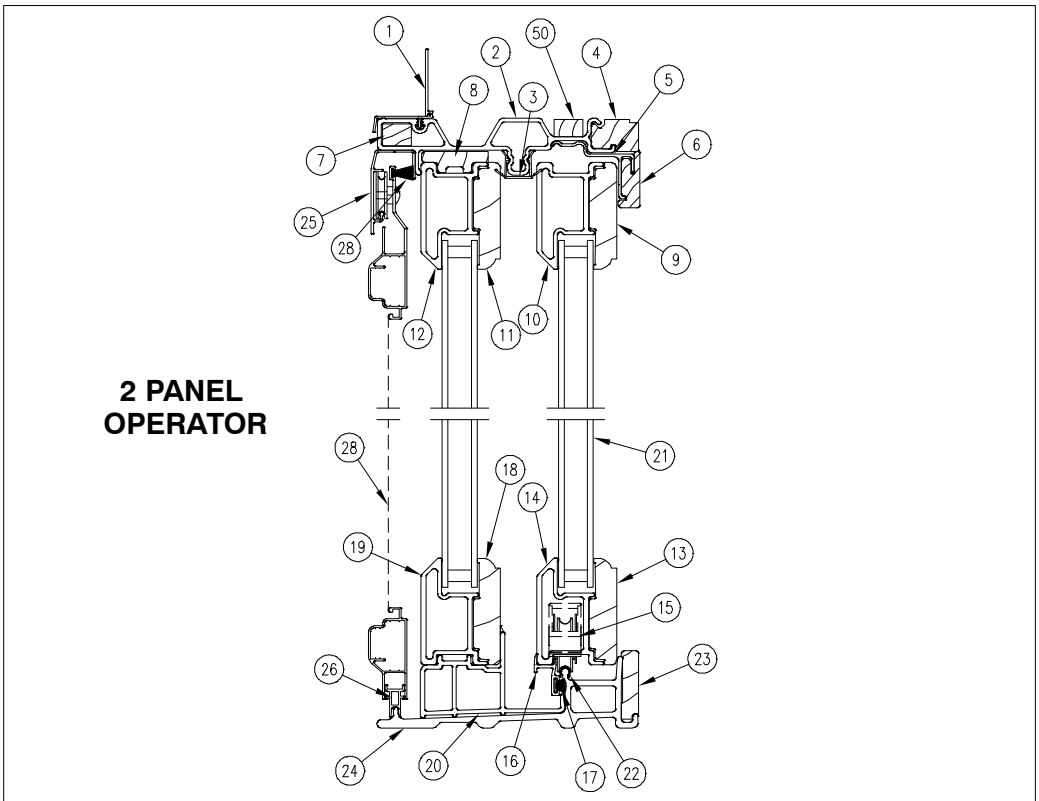

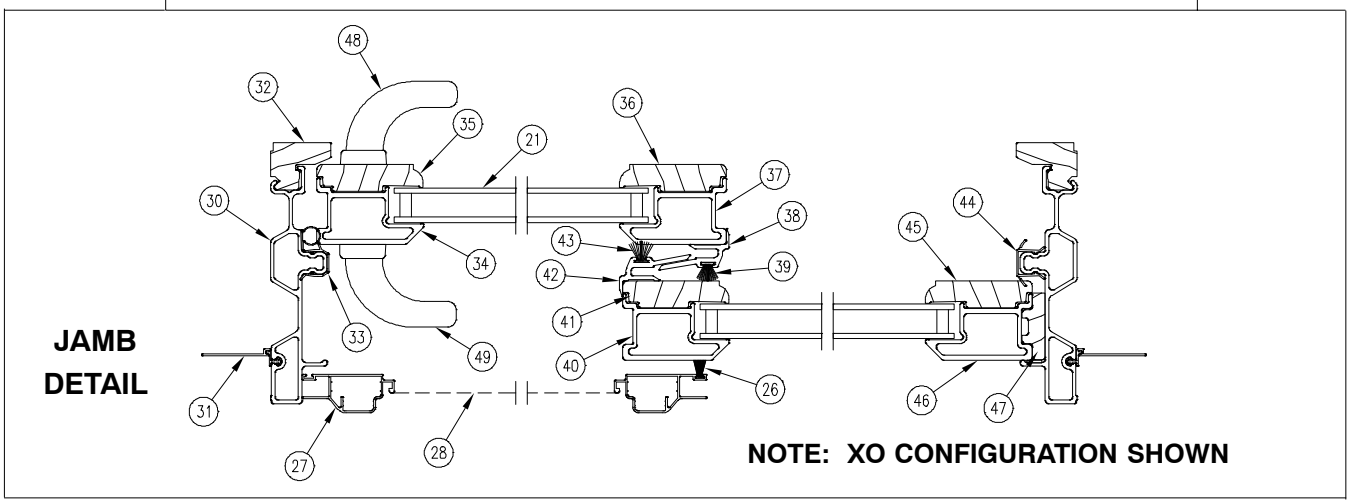

NOTE: Not to scale; specifications subject to change without notice.

1. Head Jamb Nailing Fin/Drip Cap
2. Ultrex Head Jamb
3. Head Jamb Parting Stop Weather Strip
4. Head Jamb Liner – W8565
5. Panel Guide Fastener
6. Panel Guide
7. Head Jamb Screw Backer
8. Stat. Panel Head Jamb Spacer
9. Operator Panel Top Rail
10. Operator Panel Ultrex Top Rail
11. Stationary Panel Top Rail
12. Stationary Panel Ultrex Top Rail
13. Operator Panel Bottom Rail
14. Operator Panel Ultrex Bottom Rail
15. Adjustable Roller
16. Operator Panel Drip Seal – V1176
17. Panel Drip Weather Strip – V1194
18. Stationary Panel Bottom Rail
19. Stationary Panel Ultrex Bottom Rail
20. Stationary Panel Leveling Block – V1171
21. Insulating Glass
22. Aluminum Cap
23. Sill Liner – W2528
24. Sill (Ultrex)
25. Head Jamb Screen Track – A1237
26. Screen Frame Weather Strip
27. Screen Frame
28. Screen Mesh
29. Screen Roller Guide
30. Jamb (Ultrex)
31. Jamb Nailing Fin
32. Jamb Liner – W7623
33. Operator Jamb Parting Stop Weather Strip
34. Operator Ultrex Locking Stile
35. Operator Locking Stile
36. Operator Meeting Stile
37. Operator Ultrex Meeting Stile
38. Operator Panel Interlock – V1181
39. Operator Panel Interlock Pile Weather Strip
40. Stationary Panel Ultrex Meeting Stile
41. Stationary Panel Meeting Stile
42. Stationary Panel Interlock – V1181
43. Stationary Panel Interlock Pile Weather Strip
44. Stationary Jamb Parting Stop Weather Strip – V735
45. Stationary Panel Jamb Stile
46. Stationary Panel Ultrex Jamb Stile
47. Stationary Panel Jamb Spacer – W8581
48. Interior Handle
49. Exterior Handle
50. Panel Guide Backer

3 PANEL OPERATORS

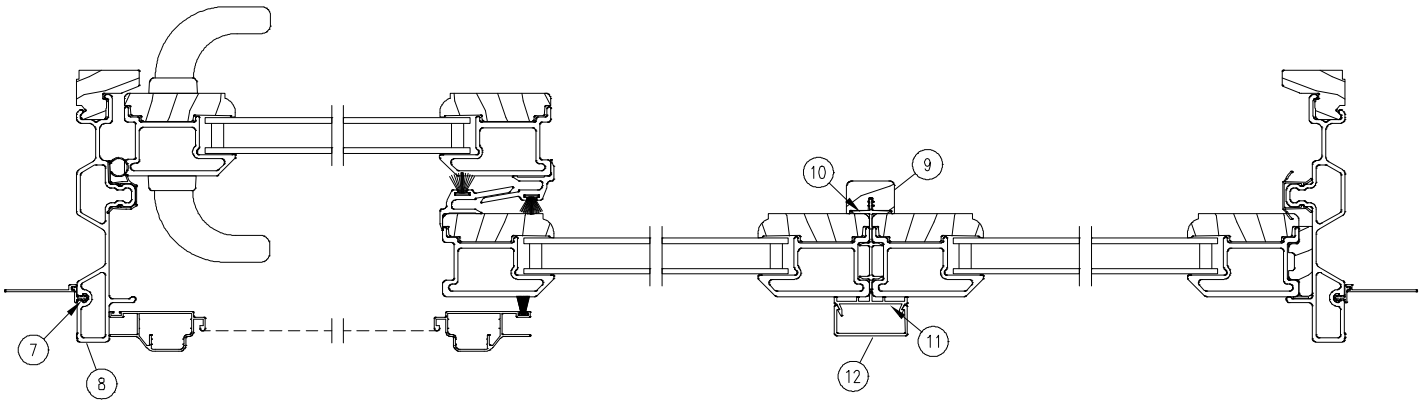

3 PANEL JAMB DETAIL – XOO R

JAMB DETAIL

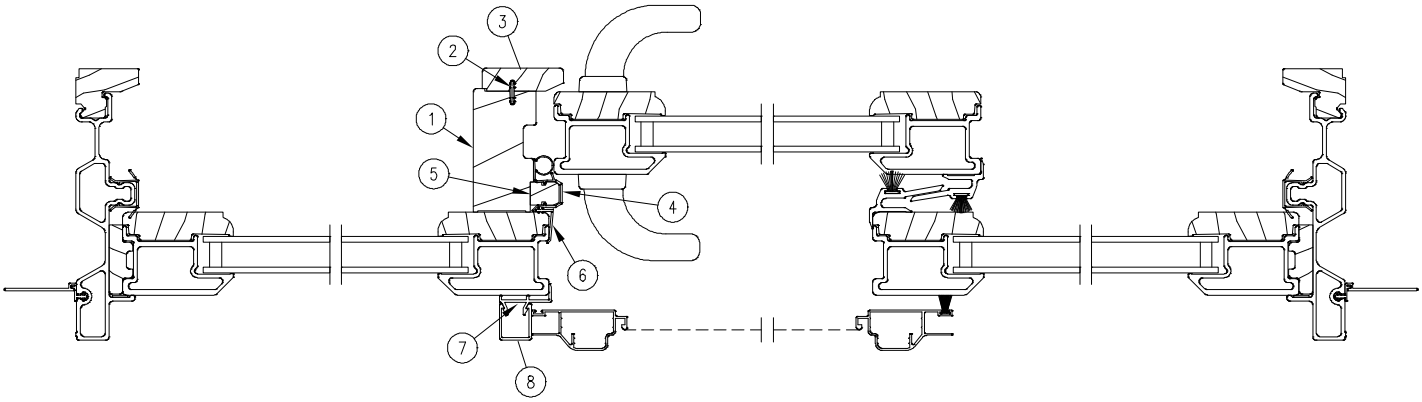

3 PANEL JAMB DETAIL – OXO R

NOTE: Not to scale; specifications subject to change without notice.

1. Astragal – W7717
2. Connecting Barb – V803
3. Astragal Trim – V7718
4. Operating Jamb Parting Stop Weather Strip – V011
5. Astragal Parting Stop – V7716
6. Astragal Stile Cap
7. Screen Stop Astragal Base
8. Screen Stop Astragal Cap
9. Mull Trim – W7719
10. Panel Spline – V1193
11. Mull Cap Base – A363
12. Mull Cap – A364

When ordering replacement Sliding Patio Door parts specify part number, description, color (if applicable), and handing (if applicable).

ILLUSTRATION *NOT TO SCALE*	DESCRIPTION	OPER./COLOR	PART NO.
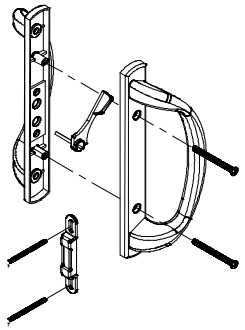 **viewed from interior**	**Hardware Assembly Package Non–keyed** *Includes:* *1 – Handle Assembly, interior and exterior (same finish)* *2 – #8 x 2″ machine screws (color match)* *1 – Lock lever, color match* *1 – Keeper* *2– #8 x 2 1/2″ PH Screws*	WH AF BS PVD SN PVD ORBZ PVD	10150086 10150087 10150088 10150089 10150090
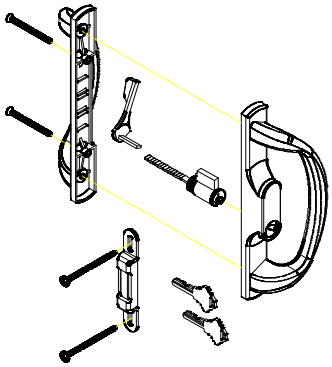	**Hardware Assembly Package Keyed** *Includes:* *1 – Handle Assembly, interior and exterior (same finish)* *2 – #8 x 2″ machine screws (color match)* *1 – Lock lever, color match* *1 – Keeper* *2– #8 x 2 1/2″ PH Screws* *1 – Keyed Cylinder* *2 – Keys*	OX WH OX AF OX BS PVD OX SN PVD OX ORBZ PVD XO WH XO AF XO BS PVD XO SN PVD XO ORBZ PVD	10600091 10600092 10600093 10600094 10600095 10600096 10600097 10600098 10600099 10600100
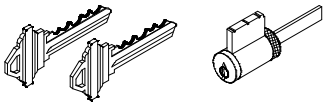	**Keyed Cylinder** *Includes:* *1–Lock cylinder* *2–Keys*		11860975
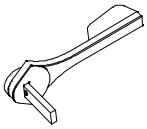	**Lock Lever**	WH AF BS PVD SN PVD ORBZ PVD	11897066 11897067 11897068 11897069 11897070
	Machine Screw, #8 x 2″	WH AF BS SN ORBZ	11897061 11897062 11897063 11897064 11897065
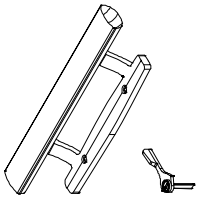	**Interior Handle w/ Turn Lever** Used for product 1/1997 – 4/2001	AF WH*	Discontinued

* Arctic White was the standard 1/1997–2/2002.

ILLUSTRATION *NOT TO SCALE*	DESCRIPTION	OPER./COLOR	PART NO.
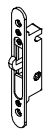	**Mortise Lock** *Includes:* *1 – Mortise lock* *2 – #8 x 1 ″ Phillips self tapping flathead screws 11800816*		02100960
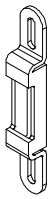	**Keeper** includes fasteners: *2 – #8 x 2 1/2 ″ Phillips self tapping pan head screws* *2 – #10 x 1 ″ Phillips pan head screws (OXO unit only) 11801013*		02100962
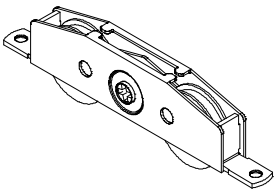	**Adjustable Panel Roller** includes fasteners: *2 – #8 x 1 ″ Phillips self tapping flathead screws 11800816*		10820000
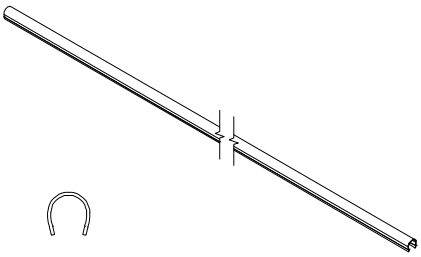	**Stainless Steel Sill Cap** CN 5–0 width CN 6–0/ 9–0 OXO width CN 9–0 OOX, XOO width	 58″ (1473) 70″ (1778) 105 1/2″ (2680)	 10500150 10500155 10500192
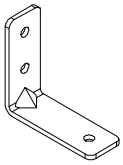	**Stationary Panel Bracket** includes fasteners: *3 – #8 x 1 ″ Phillips self tapping pan head beige screws for OX, XO, OOX, XOO configuration units 11800819*	BG	10500131
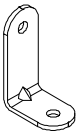	**90 Degree Angle Bracket** includes fasteners: *2 – #8 x 1 ″ Phillips self tapping pan head beige screws 11800819* *NOTE: For OOX, XOO configurations, 2 required*		11100355

ILLUSTRATION *NOT TO SCALE*	DESCRIPTION	LENGTH/ COLOR	PART NO.
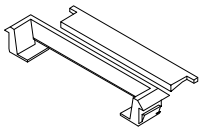	**Sill Weep Cover and Flap** Nylon	BG	15633099
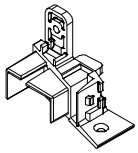	**Sill Leveling Block End Cap** includes fasteners: *1 – #8 x 1/2″ Phillips stainless steel screw 11800516* *1 – #8 x 1 1/2″ Phillips pan head screw (sill) 11865161* *NOTE: XO part shown*	XO OX	10500144 10500145
	Roller Adjustment Hole Cap *NOTE: For OOX, XOO configurations, 2 required*	BG	11170001
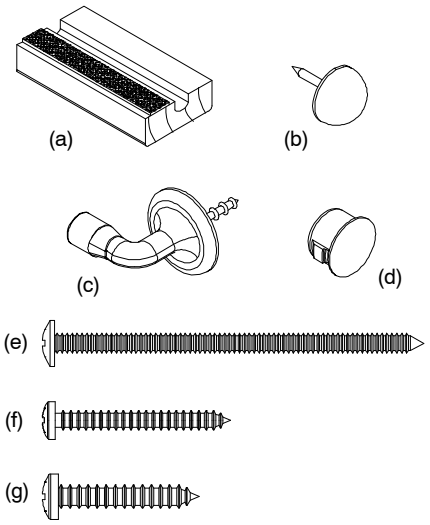	**Sliding Patio Door Installation Package** *Includes:* *2 – Operator stop block assemblies (a) (not included with OOX or XOO configurations) BA 11900315 WH 39240315* *2 – Thumb tack bumpers (b) 02101000* *2 – Door stops (c) (included with OOX and XOO configurations) 11872001* *1 –Roller adjustment hole cap beige (d) 11170001* *5 or 7 – #8 x 3″ Phillips panhead screws – beige (e)* 11800829* *1 or 2 – #8 x 1 1/2″ Phillips panhead screws – beige (f)* 11800852* *2 – #8 x 1″ Phillips panhead screws beige (g) (included with OXO doors only) 11801013* *NOTE: Also included with each package are installation instructions and nailing fin corner gaskets.* ** 7 and 2 quantities used on 3 wide units.*	OX/XO BA OX/XO WH OXO BA OXO WH OOX/XOO	11896502 11896504 11896506 11896508 11896510

ILLUSTRATION *NOT TO SCALE*	DESCRIPTION	LENGTH/ COLOR	PART NO.
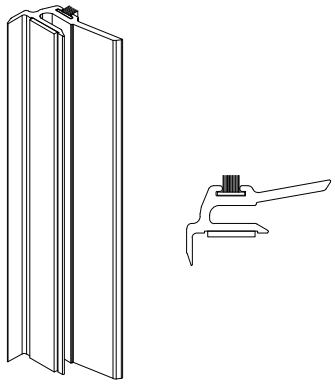 *NOTE: Adhesive tape and weatherstrip included*	**Interlock, Stationary** V009 includes fasteners: *14 – #8 x 1″ self tapping beige Phillips pan head screws 11800819*	BG	
	CN 6–5 XO height	77 3/16″ (1961)	15917665
	CN 6–5 OX height	77 3/16″ (1961)	15917666
	CN 6–8 XO height	79 11/16″ (2024)	15917668
	CN 6–8 OX height	79 11/16″ (2024)	15917669
	Interlock, Operator V009 includes fasteners: *14 – #8 x 5/8″ self tapping Phillips pan head screws 11800505*	BG	
	CN 6–5 XO height	77″ (1956)	15916265
	CN 6–5 OX height	77″ (1956)	15916266
	CN 6–8 XO height	79 1/2″ (2019)	15916268
	CN 6–8 OX height	79 1/2″ (2019)	15916269
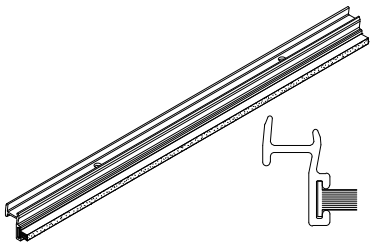 *NOTE: Weatherstrip included*	**Panel Drip Seal** V010 includes fasteners: *6 – #7 x 1/2″ Phillips self tapping pan head screws 11800756*	BG	
	CN 5–0 width	29 5/8″ (752)	15916350
	CN 6–0/9–0 width	35 5/8″ (905)	15916355
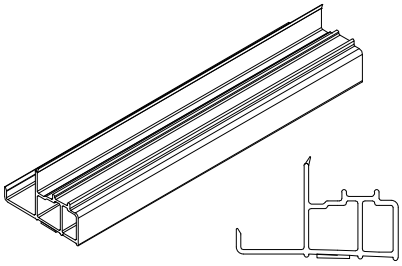 *NOTE: Adhesive tape included*	**Stationary Panel Leveling Block** V008 includes fasteners: *1 – #8 x 3/4″ self tapping truss head almond frost screws (OX, XO) 11800833* *3 – #8 x 3/4″ self tapping truss head almond frost screws (OOX, XOO, OXO) 11800833*	BG	
	CN 5–0 width	29 19/32″ (752)	15916750
	CN 6–0/9–0 OXO width	35 19/32″ (904)	15916755
	CN 9–0 OOX, XOO width	71 9/32″ (1811)	15916795
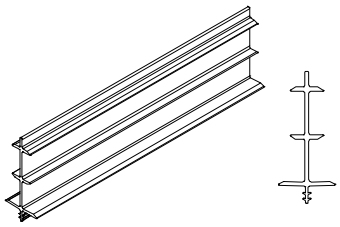	**Panel Spline** V924 *NOTE: For OOX or XOO door configurations*	BG 78 7/16″ (1992)	15812990

ILLUSTRATION *NOT TO SCALE*	DESCRIPTION	LENGTH/ COLOR	PART NO.
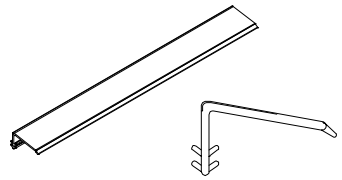	**Astragal Stile Cap*** V925 80 1/2″ (2045) *NOTE: For OXO door configurations*	SW PB BZ EG CS EB *AR	15812994 15812996 15812984 15812987 15811290 15812978 15812995
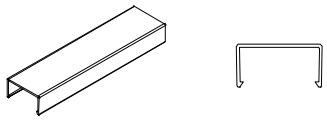	**Mullion Cap*** A364 79 5/32″ (2011) *NOTE: For OOX or XOO door configurations*	SW PB BZ EG CS EB *AR	15917467 15917469 15917466 15917465 15917464 18548668 15917468
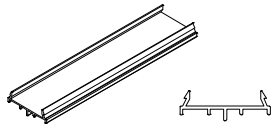	**Mullion Cap Base*** A363 80 1/2″ (2045) includes fasteners: *16 – #8 x 5/8″ Phillips self tapping pan head screws 11800505* *2 – #8 x 1 1/2″ Phillips self tapping pan head screws 11865161* *NOTE: For OOX or XOO door configurations*	SW PB BZ EG CS EB *AR	15917367 15917369 15917366 15917370 15917371 15917372 15917368
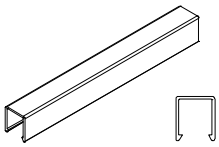	**Screen Stop Astragal Cap*** A361 80 25/32″ (2052) *NOTE: For OXO door configurations*	SW PB BZ EG CS EB *AR	15917167 15917169 15917166 15917170 15917171 15917172 15917168
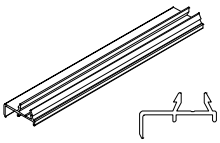	**Screen Stop Astragal Base*** A362 80 1/2″ (2045) includes fasteners: *8 – #8 x 5/8″ Phillips self tapping pan head screws 11800505* *1 – #8 x 1 1/2″ Phillips self tapping pan head screws 11865161* *NOTE: For OXO door configurations*	SW PB BZ EG CS EB *AR	15917267 15917269 15917266 15917270 15917271 15917272 15917268
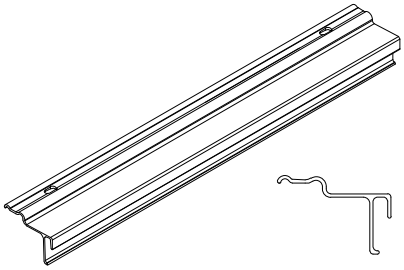	**Aluminum Panel Guide Fastener** A1223 includes fasteners: *7–#8x5/8″ Trusshead Phillips screws 11800862* CN 5–0 CN 6–0 CN 9–0 OOX, XOO CN 9–0 OXO LH** CN 9–0 OXO RH**	 56 1/4″ (1429) 68 1/4″ (1734) 103 3/4″ (2635) 33 1/2″ (851) 33 1/2″ (851)	 18546050 18546055 18546096 18546092 18546094

* Arctic White was the standard 1/1997–2/2002.
** Requires both the 9–0 OXO and the 6–0 part

WEATHER STRIP

When ordering replacement weatherstrip specify:

1. Quantity;
2. Profile number;
3. Part number;
4. Size;
5. Description.

ILLUSTRATION *NOT TO SCALE*	DESCRIPTION	LENGTH/ COLOR	PART NO.
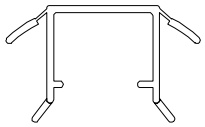	**Head Jamb Parting Stop Weather Strip** V735	BG	
	CN 5–0 width	57 15/32″ (1460)	15916450
	CN 6–0 width	69 15/32″ (1765)	15916455
	CN 9–0 width	104 31/32″ (2666)	15916495
	Stationary Jamb Parting Stop Weather Strip V735	BG	
	CN 6–5 height	78 9/16″ (1996)	15916465
	CN 6–8 height	81 1/8″ (2059)	15916468
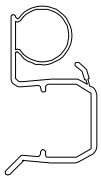	**Operator Jamb Parting Stop Weather Strip** V011	BG	
	CN 6–5 height XO	78 9/16″ (1996)	15916065
	CN 6–5 height OX	78 9/16″ (1996)	15916066
	CN 6–8 height XO	81 1/8″ (2059)	15916068
	CN 6–8 height OX	81 1/8″ (2059)	15916069
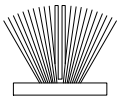	**Panel Drip Weather Strip** 17/64″ x 1/4″ pile weatherstrip with fin	GY Specify Length	15607525
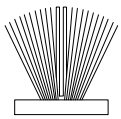	**Operator Panel Interlock Weather Strip** 17/64″ x 13/32″ pile weatherstrip with fin	BG Specify Length	15607569
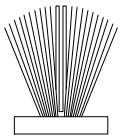	**Stationary Panel Interlock Weather Strip** 17/64″ x 15/32″ pile weatherstrip with fin	BG Specify Length	11107546
	Sill Dust Block 2″x 13/16″ x 5″ *NOTE: Adhesive backed*	GY	10500132
	Head Jamb Dust Block 2 5/16″x 5/8″x 1/2″ *NOTE: Adhesive backed*	GY	10500135

ILLUSTRATION *NOT TO SCALE*	DESCRIPTION	LENGTH/ COLOR	PART NO.
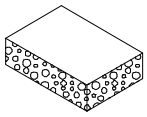	**Jamb / Sill Plug** 1 1/8″x 25/32″x 5/16″ *NOTE: Adhesive backed*	BG	10500136
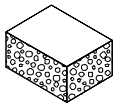	**Panel Drip Plug** 3/4″x 19/32″x 3/8″ *NOTE: Adhesive backed*	GY	10500137
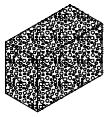	**Astragal Plug** 1″x 1/2″x 11/16″	BG	10500152
	Head Jamb to Stationary Panel Foam Plug	BG	10500128
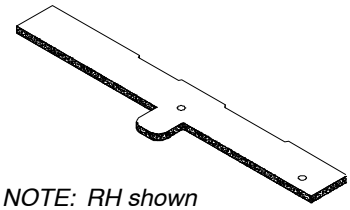 *NOTE: RH shown*	**Sill to Jamb Gasket** 3/4″ x 6 3/8″ x 3/4″x 1/8″ *NOTE: Adhesive backed* *NOTE: Left and right hand supplied.*	GY	10500140
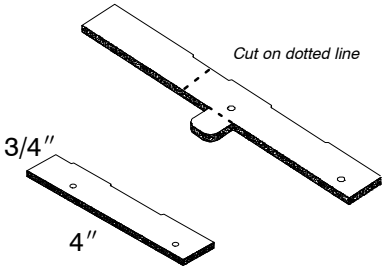	**Astragal Gasket** 3/4″ x 4″ x 1/8″ *NOTE: The adhesive backed astragal gasket is formed from the sill to jamb gasket by cutting the gasket to the dimensions shown in the illustration.*	GY	10500140
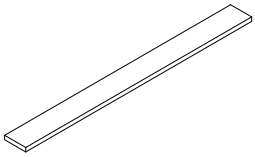	**Frame Sealant Foam** 3/8″ x 1/16″ x 150′ *NOTE: Adhesive backed*	GY	10500142

When ordering replacement wood parts specify:

1. Part number;
2. Size;
3. Description.
4. Handing (if applicable)
5. Bare wood or white interior.

ILLUSTRATION *NOT TO SCALE*	DESCRIPTION	LENGTH	BARE WOOD PART NO.	WHITE INTERIOR PART NO.
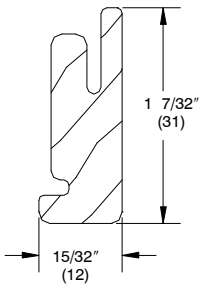	**Operator Panel Guide** W8566 Used for product 11/2003 to present.			
	CN 5–0 width	56 3/8″ (1432)	31518750	39228750
	CN 6–0 width	68 3/8″ (1737)	31518755	39228755
	CN 9–0 width	103 13/16″ (2637)	31518792	39228792
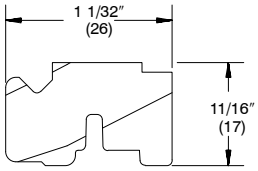	**Head Jamb Liner** W8565 Used for product 11/2003 to present			
	CN 5–0 width	58 7/8″ (1495)	31518650	39228650
	CN 6–0 width	70 7/8″ (1800)	31518655	39228655
	CN 9–0 width	106 3/8″ (2702)	31518695	39228695
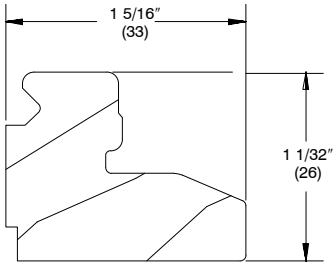	**Jamb Liner** W7623 *NOTE: Handing is from the exterior*			
	CN 6–5 RH	79 1/16″ (2008)	31505365	39205365
	CN 6–5 LH	79 1/16″ (2008)	31505366	39205366
	CN 6–8 RH	81 9/16″ (2072)	31505368	39205368
	CN 6–8 LH	81 9/16″ (2072)	31505369	39205369
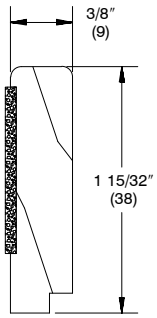	**Oak Sill Liner** W6275 *NOTE: Adhesive tape included.* *2 – #8 x 1 1/2″ Phillips self tapping pan head screws 11865161* *2 – #8 x 5 5/8″ Phillips pan head screws 11800505*			
	CN 5–0 width	58 7/8″ (1495)	31505050	Not Applicable
	CN 6–0 width	70 7/8″ (1800)	31505055	
	CN 9–0 width	106 3/8″ (2702)	31505095	

ILLUSTRATION *NOT TO SCALE*	DESCRIPTION	LENGTH	BARE WOOD PART NO.	WHITE INTERIOR PART NO.
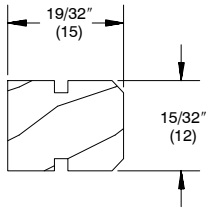	**Astragal Parting Stop** W7716 *NOTE: For OXO configurations* CN 6–8 height	79 1/4″ (2013)	31506468	Not Applicable
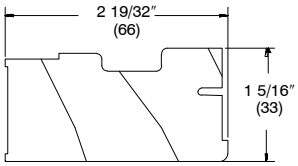	**Astragal** W7717 *NOTE: For OXO configurations – handling is from the exterior* CN 6–8 RH CN 6–8 LH	80 7/8″ (2054) 80 7/8″ (2054)	31506768 31506769	39206768 39206769
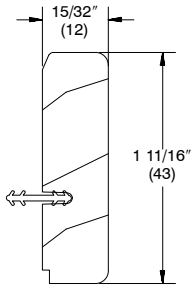	**Astragal Trim** W7718 *NOTE: Connecting barb (V803) included.* *NOTE: For OXO configurations.* CN 6–8 height	78 13/16″ (2002)	31506568	39206568
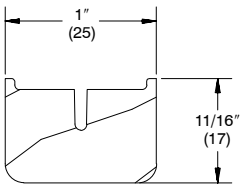	**Interior Mullion Trim** W7719 *NOTE: For XOO or OOX configurations* CN 6–8 height	79 3/4″ (2026)	31506668	39206668
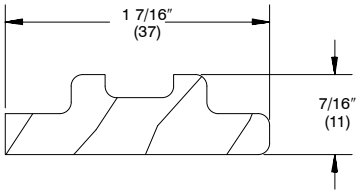	**Stationary Panel Spacer** W7626	12″ (305)	31505612	Not Applicable

ILLUSTRATION *NOT TO SCALE*	DESCRIPTION	LENGTH	BARE WOOD PART NO.	WHITE INTERIOR PART NO.
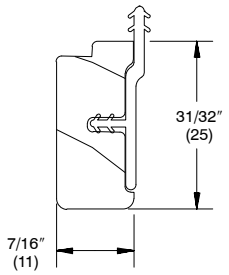	**Operator Panel Guide** W7710 Replaced with W8566 Used for product 1/1997 – 11/2003 *Includes:* *1 – Panel Guide* *1 – Panel Guide Connector (V016)*			
	CN 5–0 width	56 3/8″ (1432)	31506350	39206350
	CN 6–0 width	69 3/8″ (1762)	31506360	39206360
	CN 9–0 width	105 3/8″ (2677)	31506390	39206390
	CN 6–0 retro width	68 3/8″ (1737)	31506355	39206355
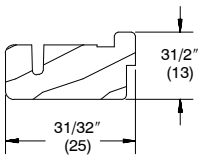	**Operator Panel Guide** W7625 Replaced with W7710			Discontinued
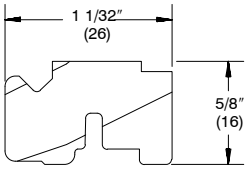	**Head Jamb Liner** W7709 Replaced with W8565 Used for product 1/1997 – 11/2003			
	CN 5–0 width	58 7/8″ (1495)	31506250	39206250
	CN 6–0 width	71 7/8″ (1876)	31506260	39206260
	CN 9–0 width	107 7/8″ (2740)	31506290	39206290
	CN 6–0 retro width	70 7/8″ (1800)	31506255	39206255
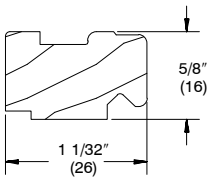	**Head Jamb Liner** W7624 Replaced with W7709			Discontinued

ORDERING REPLACEMENT INTEGRITY SLIDING PATIO DOOR PANELS

To order replacement panels specify:

1. Size; (verify manufacture date before ordering)
2. Operator or stationary;
3. Handing;
4. Stone White, Pebble Gray, Bronze, Evergreen, Cashmere, Ebony or Arctic White exterior;
5. Glazing;
6. Bare wood or white interior.

Integrity Patio Door (IPD) Replacement Panels

Units Manufactured 1997 to March 1, 2004

Daylight Opening to Panel OM

Daylight Width + 4 5/8″ (117) = OM Width of Panel
Daylight Height + 4 5/8″ = OM Height of Panel

WIDTH		HEIGHT	
SIZE	OM WIDTH	SIZE	OM HEIGHT
5–0	29 5/8″ (752)	6–5	77 3/16″ (1961)
6–0 retro	35 5/8″ (905)	6–8	79 11/16″ (2024)
6–0	36 1/8″ (918)		
9–0	36 1/8″ (918)		

Integrity Sliding Patio Door Replacement (ISPD) Panels

Units Manufactured March 1, 2004 to Present

Daylight Opening to Panel OM

Daylight Width + 4 5/8″ = OM Width of Panel
Daylight Height + 4 5/8″ = OM Height of Panel

WIDTH		HEIGHT	
SIZE	OM WIDTH	SIZE	OM HEIGHT
5–0	29 5/8″	6–5	77 3/16″
6–0	35 5/8″	6–8	79 11/16″
9–0	35 5/8″		

EXTERIOR VIEW PATIO DOOR

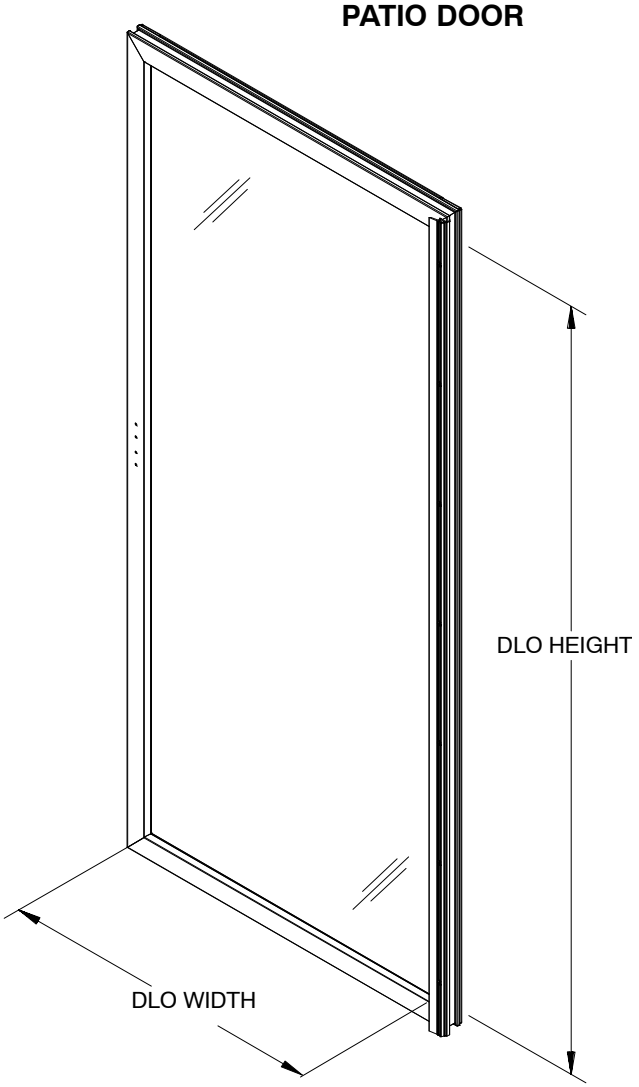

NOTE: Operator panels include rollers, panel drip with plug, and interlock. Stationary panels include interlock and panel spacers. The daylight opening is the measurement of visible glass.

ORDERING REPLACEMENT GRILLES

When ordering replacement grilles specify:

1. Call number (using chart below).
2. Barewood or white interior

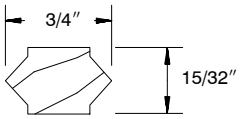

W7340

GRILLE END PROFILE

SLIDING PATIO DOOR							
WIDTH				HEIGHT			
CN	PANEL OM	DLO	GRILLE CUT	CN	PANEL OM	DLO	GRILLE CUT
CN5–0	29 5/8″ (752)	25″ (635)	3W	CN6–5	77 3/16″ (1961)	72 9/16″ (1843)	5H
CN6–0	35 5/8″ (905)	31″ (787)	3W	CN6–8	79 11/16″ (2024)	75 1/16″ (1907)	5H
CN9–0	35 5/8″ (905)	31″ (787)	3W				

ORDERING SLIDING REPLACEMENT SCREENS FOR PATIO DOOR (IPD), SLIDING PATIO (ISPD)

Screens are standard with a color matched aluminum surround and charcoal colored fiberglass 18 x 16 screen mesh. Determine the outside measurement of the existing screen. Find the sizes that correspond to the width and height indicated on the following chart.

When ordering replacement screen specify:

1. Size; if there is no existing screen from which to obtain the OM of the screen, determine the size of the screen by using the conversion chart below. The daylight opening is the measurement of the visible glass.
2. Handing;

Screen Sizes for Patio Door (IPD) manufactured 1997 to May 5, 2003

Daylight Opening to OM of Screen

Daylight Width +4 3/16″ (106) = OM Width of Screen
Daylight Height +4″ (102)= OM Height of Screen

WIDTH		HEIGHT	
SIZE	OM WIDTH	SIZE	OM HEIGHT
5–0	29 3/16″ (741)	6–5	76 19/32″ (1975)
6–0 retro	35 3/16″ (894)	6–8	79 3/32″ (2038)
6–0	35 11/16″ (906)		
9–0	35 11/16″		

Screen Sizes for Patio Door (IPD) manufactured May 5, 2003 to March 1, 2004

Daylight Opening to OM of Screen

Daylight Width +4 3/16″ (106) = OM Width of Screen
Daylight Height +5 3/16″ (132)= OM Height of Screen

WIDTH		HEIGHT	
SIZE	OM WIDTH	SIZE	OM HEIGHT
5–0	29 3/16″	6–5	77 3/4″ (1975)
6–0 retro	35 3/16″	6–8	80 1/4″ (2038)
6–0	35 11/16″		
9–0	35 11/16″		

Screen Sizes for Sliding Patio Door (ISPD) manufactured March 1, 2004 to Present

Daylight Opening to OM of Screen

Daylight Width +4 3/16″ (106) = OM Width of Screen
Daylight Height +5 3/16″ (132)= OM Height of Screen

WIDTH		HEIGHT	
SIZE	OM WIDTH	SIZE	OM HEIGHT
5–0	29 3/16″	6–5	77 3/4″
6–0	35 3/16″	6–8	80 1/4″
9–0	35 3/16″		

ATTENTION: The Integrity Patio Door screen profile changed between February 2002 and May 2003.

- White screen profiles changed on 2/4/2002, along with a color change from Arctic White* to Stone White. The roller bar (A213) and screen track (A214) were still used.
- On 5/6/2003 Stone White and Pebble screens changed to the new profile but use an integral roller bar instead of the old A213 roller bar and A214 screen track.
- Refer to illustrations below to identify screen type.

Pre 2/4/02 **2/4/02 to 5/5/03** **5/6/03 to Present**

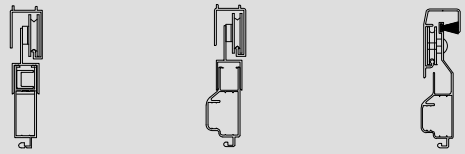

*Old profile panels, A213 Screen Roller Bar and A214 HJ Screen track are available in Arctic White through the warranty period.

When ordering Sliding Patio Door replacement screen parts specify:

1. Description;
2. Part number;
3. Quantity.

ILLUSTRATION *NOT TO SCALE*	DESCRIPTION	LENGTH/ COLOR	PART NO.
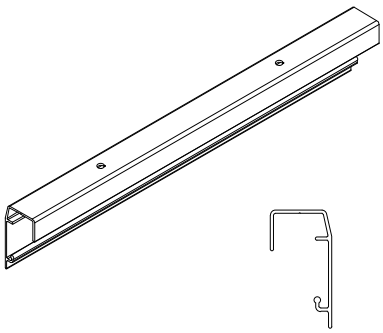	**Head Jamb Screen Track** A1237 *Includes:* *1 – Head jamb screen track* *6 – #8x5/8″ Phillips self tapping undercut trusshead screws 11800862*		
	CN 5–0 SW	57 17/32″ (1461)	18547250
	CN 5–0 PB		18547350
	CN 5–0 BZ		18547150
	CN 5–0 EG		18547050
	CN 5–0 CS		18546950
	CN 5–0 EB		18546850
	CN 6–0 SW	69 17/32″ (1766)	18547255
	CN 6–0 PB		18547355
	CN 6–0 BZ		18547155
	CN 6–0 EG		18547055
	CN 6–0 CS		18546955
	CN 6–0 EB		18546855
	CN 9–0 SW	105 1/32″ (2668)	18547295
	CN 9–0 PB		18547395
	CN 9–0 BZ		18547182
	CN 9–0 EG		18547095
	CN 9–0 CS		18546995
	CN 9–0 EB		18546895
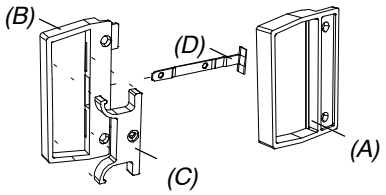	**Screen Handle Assembly** *Includes:* *1 – Exterior handle (A)* *1 – Interior handle (B)* *1 – Slide (C)* *1 – Latch (D)* *3 – Screws* *1 – Rivet* *NOTE: For newer profile screens. See previous page to determine replacement handle type based on screen profile.*	BK	10150028

ILLUSTRATION *NOT TO SCALE*	DESCRIPTION	LENGTH/ COLOR	PART NO.
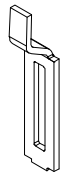	**Door Strike** *Includes:* *1 – Door strike* *1 – #8 x 5/8″ Phillips pan head screw 11800505*		02100963
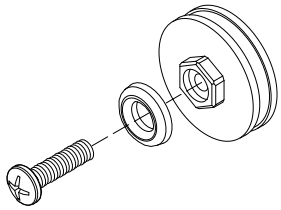	**Screen Roller Assembly** *Includes:* *2 – Rollers* *2 – Machine screws* *2 – Grommet washers*		11869525
	Screen Roller Track Dust Block 7/8″ x 7/8″ x 3/16″ *NOTE: Adhesive backed, located behind the screen roller bar*	GY	10500143
	Screen Door Meeting Stile Dust Block 17/32″ x 7/8″ x 1/2″ *NOTE: Adhesive backed*	GY	10500161
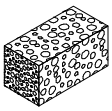	**Screen Bumper** 3/4″ x 3/4″ x 1 3/8″	WH	02540675
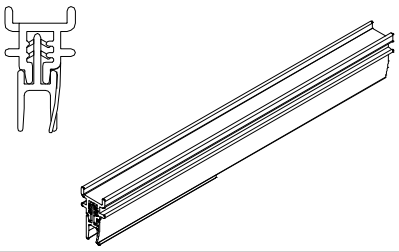	**Screen Roller Guide Assembly**	CN 5–0 CN 5–4 CN 5–10 CN 6–0/9–0 CN 8–0	15918050 15918054 15918510 15918060 15918080
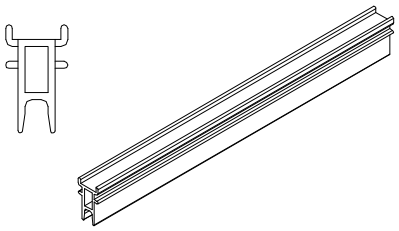	**Screen Roller Guide** V014	Discontinued – Replace with Screen Roller Guide Assembly	

ILLUSTRATION *NOT TO SCALE*	DESCRIPTION	PART NO.
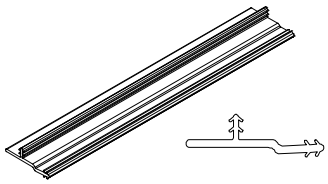	**Panel Guide Connector** V016 Usage: 7/1997 – 3/2004 CN 5–0 width 56 1/4″ (1429) CN 6–0 width 69 1/4″ (1759) CN 9–0 width 105 1/4″ (2673) CN 6–0 retro width 68 1/4″ (1734)	15915950 15915960 15915990 15915955
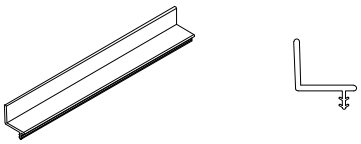	**Panel Guide Fastener** V015 Replaced with V016	Discontinued

ILLUSTRATION *NOT TO SCALE*	DESCRIPTION	COLOR	PART NO.
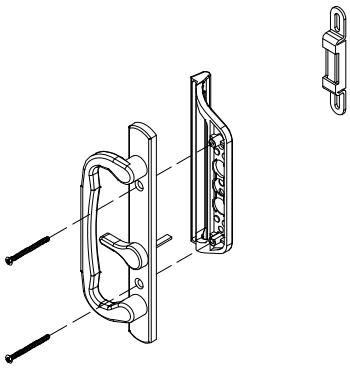	**Hardware Assembly Package** Usage: 3/2004–7/2009 *Includes:* *Interior handle, exterior pull handle, keeper, and turn lever* *2 – #8 x 2 1/2″ Phillips self tapping pan head screws (keeper)* *2 – #10 x 2″ Phillips pan head screws (handle)*	BS/SW BS/PB BS/BZ BS/EG BS/CS WH/SW WH/PB WH/BZ WH/EG WH/CS AF/SW AF/PB AF/BZ AF/EG AF/CS	10150039 10150041 10150042 10150057 10150073 10150025 10150026 10150078 10150079 10150081 10150015 10150016 10150043 10150044 10150059
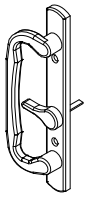	**Interior Handle w/ Turn Lever** Usage: 3/2004–7/2009 Used for product 4/2001 to present. *Includes:* *1 – Interior handle* *1 – Turn lever* *2 – #10 x 3/4″ oval head screws* *2 – #10 x 2″ Phillips pan head screws*	BS WH AF	10150050 10150051 10150052
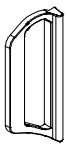	**Exterior Pull Handle*** Usage: 4/2001–7/2009 *Includes:* *1 – Exterior pull handle* *2 – #10 x 2″ Phillips pan head screws (from interior handle)*	SW PB BZ EG CS *AR	10150060 10150021 10150023 10150029 10150033 10150020

ILLUSTRATION *NOT TO SCALE*	DESCRIPTION		COLOR	PART NO.
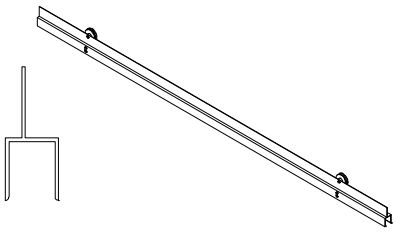	**Screen Roller Bar** A213			
	CN 5–0	AR	29 3/16″ (741)	15150050
	CN 5–0	SW	29 3/16″ (741)	16150050
	CN 5–0	PB	29 3/16″ (741)	15150150
	CN 6–0/9–0	AR	35 11/16″ (906)	15150060
	CN 6–0/9–0	SW	35 11/16″ (906)	16150060
	CN 6–0/9–0	PB	35 11/16″ (906)	15150160
	CN 6–0 retro	AR	35 3/16″ (894)	15150055
	CN 6–0 retro	SW	35 3/16″ (894)	16150055
	CN 6–0 retro	PB	35 3/16″ (894)	15150155
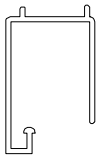	**Head Jamb Screen Track** A214 *Includes:* *1 – Head jamb screen track* *6 – #8 x 1/2″ Phillips self tapping undercut flathead screws 11800502*			
	CN 5–0 width	AR	57 17/32″ (1461)	15917050
	CN 5–0 width	SW		16917050
	CN 5–0 width	PB		15917051
	CN 6–0/9–0 width	AR	70 17/32″ (1792)	15917060
	CN 6–0/9–0 width	SW		16917060
	CN 6–0/9–0 width	PB		15917061
	CN 9–0 OOX, XOO width	AR	69 7/16″ (1764)	15917090
	CN 9–0 OOX, XOO width	SW		16917090
	CN 9–0 OOX, XOO width	PB		15917091
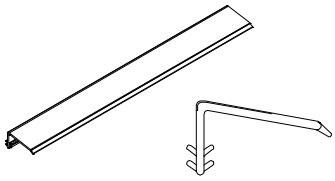	**Astragal Stile Cap** V925 80 1/2″ (2045) *NOTE: For OOX or XOO door configurations*		AR	15812995
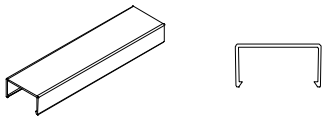	**Mullion Cap** A364 80 13/16″ (2053) *NOTE: For OOX or XOO door configurations*		AR	15917468
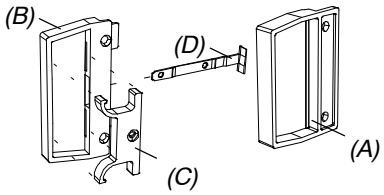	**Screen Handle Assembly** *Includes:* *1 – Exterior handle (A)* *1 – Interior handle (B)* *1 – Slide (C)* *1 – Latch (D)* *3 – Screws* *1 – Rivet* *NOTE: For older profile screens. See screen replacement page to determine handle type based on screen profile.*		BK	10150017

OBSOLETE PARTS – DOOR SIZE CHANGE – PRE 3/2004

ATTENTION: This section contains part and part numbers for current parts whose length changed due to the March 1, 2004 door size change. Obsoleted parts can be found in the previous section. For more detailed descriptions of these parts, see the main parts sections.

ILLUSTRATION *NOT TO SCALE*	DESCRIPTION	LENGTH	PART NO.
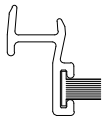	**V010 Panel Drip Seal (A)** CN 6–0/9–0 width	36 1/8″ (918)	15916360
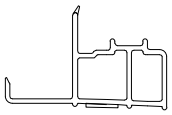	**V008 Stationary Panel Leveling Block** CN 6–0/9–0 width CN /9–0 OOX, XOO width	36 1/8″ (918) 36 11/16″ (906)	15916760 15916790
	Stainless Steel Sill Cap (C) CN 6–0/9–0 width CN /9–0 OOX, XOO width	71″ (894) 107″ (1803)	10500160 10500190
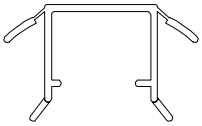	**Head Jamb Parting Stop Weatherstrip** V735 CN 6–0 width CN 9–0 (OOX, XOO) width **Requires 1 each of the following:** CN 9–0 (OXO)	 70 15/32″ (1790) 106 15/32″ (2704) 34 25/32″ (883) 70 15/32″ (1790)	 15916460 15916490 15916434 15916460
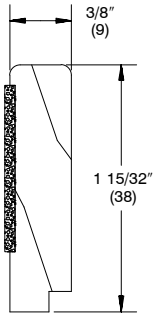	**Oak Sill Liner** W2528 – Used pre–3/2004 CN 6–0 width CN 9–0 width	 71 7/8″ (1867) 107 7/8″ (2740)	 31518360 31528390
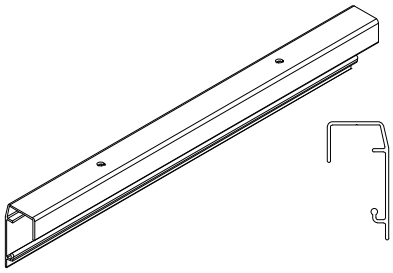	**Head Jamb Screen Track** A1237 CN 6–0 SW CN 6–0 PB CN 9–0 SW CN 9–0 PB	 70 17/32″ (1792) 106 17/32″ (2706)	 18547260 18547360 18547290 18547390

Screen Adjustment

1. Adjustment is possible from the interior by loosening or tightening the top roller screw nearest the locking jamb. Adjust the screen so that it is parallel to the locking jamb or casing to achieve an even reveal along the entire height of the jamb. See illustration 1.

NOTE: If more adjustment is necessary, the other roller adjustment screw can be used but the screen panel may need to be removed for access.

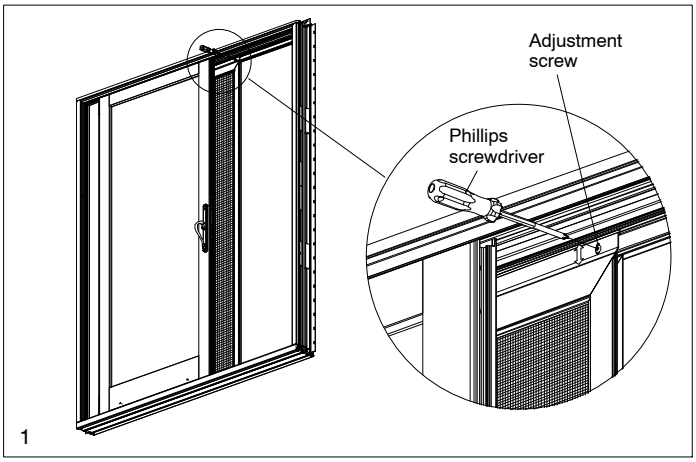

REMOVING THE SCREEN PANEL

1. To remove the screen panel, start at the bottom corner and pry the screen panel guide up with a putty knife. Pull the guide off the screen sill track and work your way to the other end. See illustration 1.
2. Once the sill end of the screen panel is completely released from the sill track, pivot the bottom of the screen out and push the panel toward the head jamb. This will release the screen panel rollers from the head jamb screen track. Remove the panel from the door. See illustration 2.

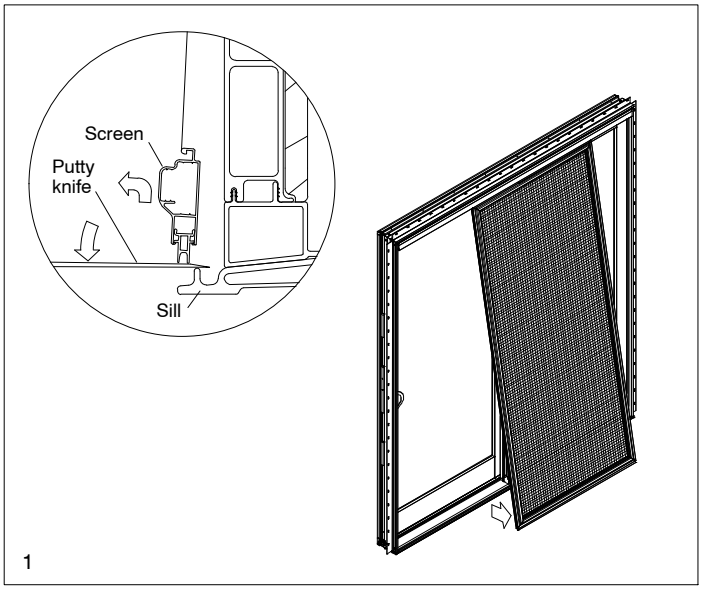

1

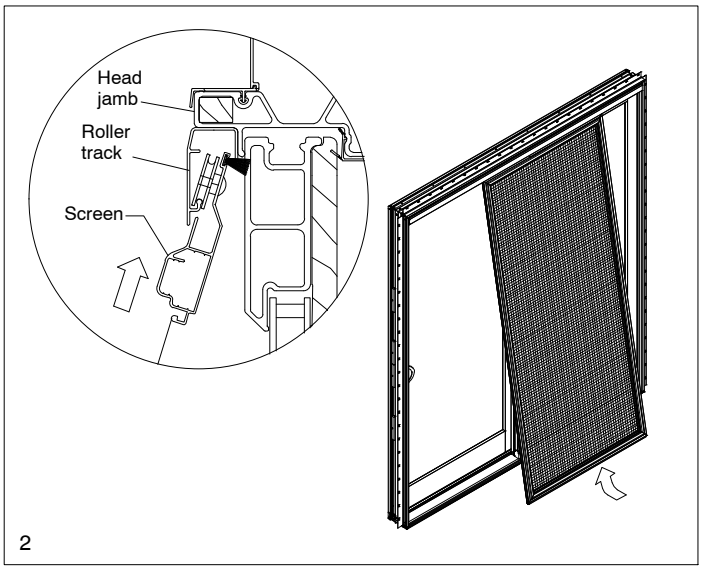

2

INSTALLING THE SCREEN PANEL

1. From the exterior, hold the screen with the rollers facing you while tilting the bottom of the screen panel away from the door. Lift the rollers into the screen track and pull the panel toward your body to engage the rollers in the track. See illustration 1. Make sure the rollers are seated in the screen track by moving the panel back and forth.
2. Once you are sure the rollers are fully seated in the screen track, pivot the screen panel onto position toward the sill and place the bottom screen panel guide into the sill track by lifting it with your fingers or by lifting with a stiff putty knife. See illustration 2.

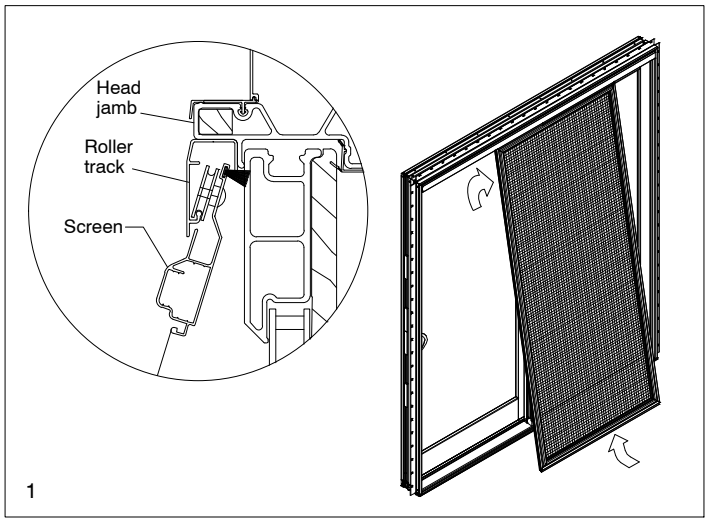

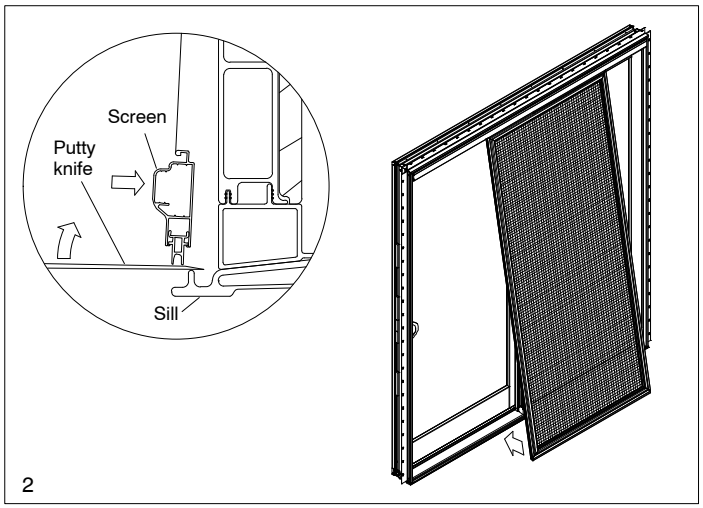

PANEL ADJUSTMENT

Tools needed: Small pry bar
Standard screwdriver
#2 Phillips screwdriver

1. Using the small pry bar or standard screwdriver remove the two roller adjustment hole caps from the bottom rail of the operating panel.
2. Slide the operating panel 1/2″ (13) – 3/4″ (19) away from the locking jamb.
3. Adjust rollers (to raise/lower panel) by turning adjustment screws with the standard screwdriver. Align panel to the locking jamb to get an even reveal and maintain equal clearance at top and bottom between head jamb and sill. See illustration 3.
4. Check panel operation.
5. If satisfactory, replace adjustment hole caps.

NOTE: See Jamb Strike Adjustment/Removal and Mortise Lock Adjustment/Removal for further panel adjustment.

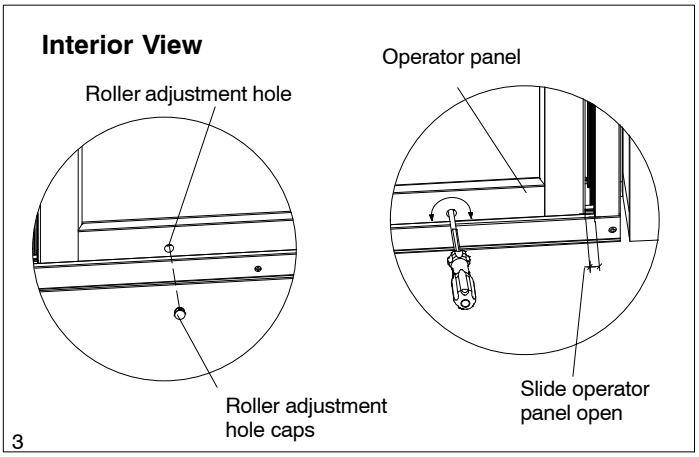

KEEPER ADJUSTMENT/REMOVAL

Tools needed: Small pry bar
Standard screwdriver

1. To adjust the keeper, first loosen the two #8 x 2 1/2″ Phillips self tapping pan head screws.
2. Adjust the keeper vertically for proper latch engagement and tighten screws. See illustration 4.
3. Check for proper panel and/or lock operation and adjust as necessary.

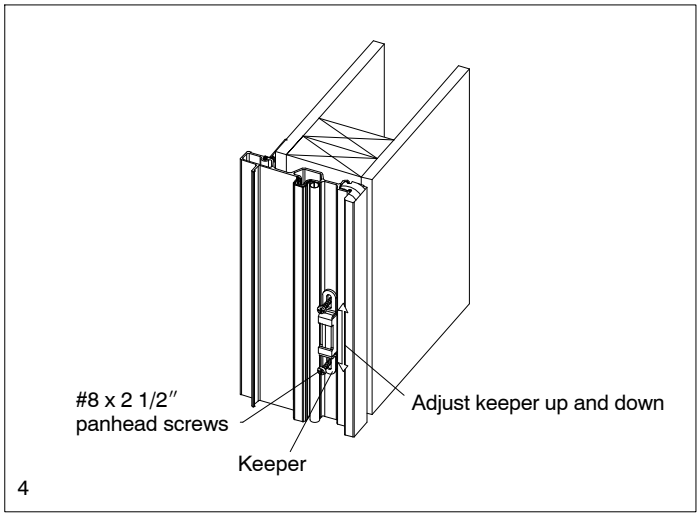

MORTISE LOCK ADJUSTMENT/REMOVAL

Tools needed: Standard screwdriver
#2 Phillips screwdriver

NOTE: Before adjusting the mortise lock latch, check position of keeper and latch. Adjust keeper as required.

1. After the door and keeper are aligned, adjust the latch pull by turning the adjustment screw with a standard screwdriver clockwise to move the latch out and counterclockwise to move the latch in from the keeper. See illustration 5.
2. The operator panel should be pulled snug by the lock. If properly adjusted, slight resistance should be felt at the end of the turn lever travel when locking.
3. Check for proper panel and/or lock operation and adjust as necessary.

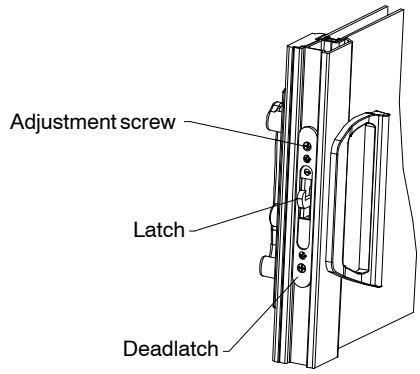

5

OPERATING PANEL REMOVAL

1. Unlock and open panel. Lower the panel completely (see panel adjustment section). Remove the exposed screws fastening the panel guide to the head jamb. See illustration 1.
2. Close and lock the operator panel. Remove the remaining screws fastening the operator panel guide to the head jamb. Remove the panel guide and fastener from the unit as shown in illustration 2.

OPERATING PANEL REPLACEMENT

1. Unlock panel and slide away from the jamb, grasp stiles, tip top of panel to the interior until clear of interior trim, carefully lift off sill.
2. To reinstall, set bottom rollers on sill track, check to ensure they are properly aligned by sliding the panel along the sill. Slide panel against locking jamb and engage mortise lock, check panel to ensure it is secured to the jamb.
3. Reapply panel guide and fastener to head jamb. Secure with the screws removed earlier (on the stationary panel side). Then unlock panel and slide completely open, fasten the panel guide with the remaining screws.
4. Check panel for proper operation and adjust if necessary.

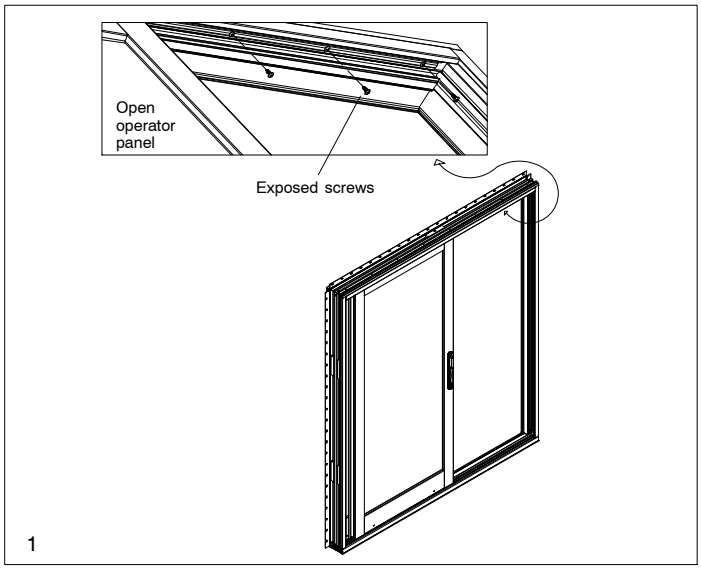

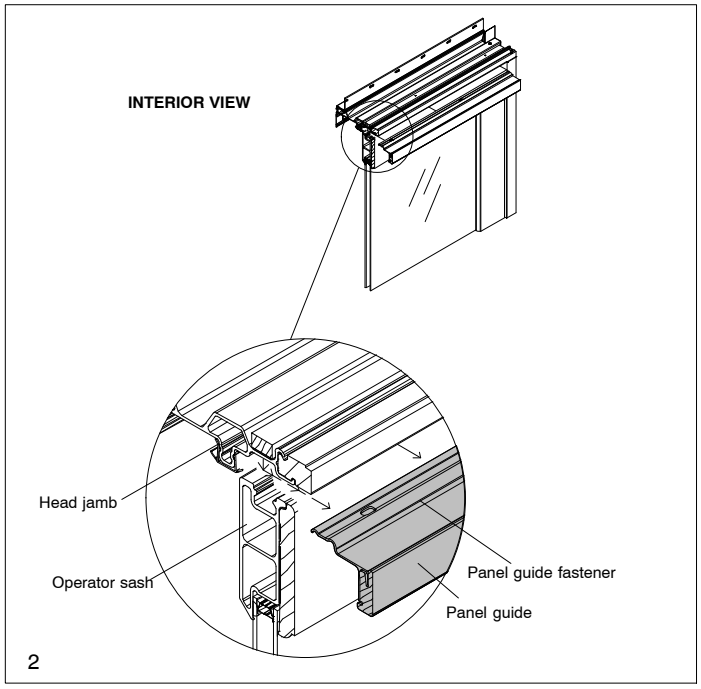

STATIONARY PANEL REMOVAL/INSTALLATION FOR OX, XO, AND OXO CONFIGURATIONS

NOTE: See Part Identification pages for additional information.

Tools needed: #2 Phillips screwdriver

Stationary Panel Removal

1. Remove operating panel (See Operating Panel Removal/Installation).
2. Remove the sill dust block found on top of the leveling block end cap. Using a #2 Phillips screwdriver, remove the #8 x 3/8" Phillips flathead machine screw and the #8 x 1 1/2″ Phillips panhead screw attaching the end cap to the sill. Also remove the #8 x 1″ Phillips pan head screw attaching the end cap to the stationary panel. See illustration 9.
3. Remove the three #8 x 1″ Phillips self tapping pan head screws from the stationary panel bracket on the head jamb. See illustration 9.

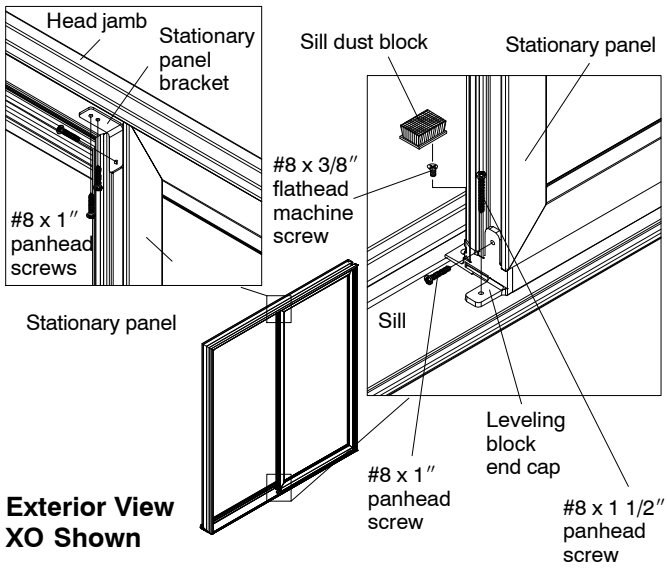

9

Stationary Panel Removal (Continued)

4. With both brackets removed, slide the stationary panel toward the locking jamb so that it clears the leveling block.
5. From the interior, grasp the panel firmly and push the bottom out while tipping in the top so that it clears the head jamb parting stop and weatherstrip. See illustration 10.
6. Note location of head jamb to stationary panel foam plug and wood panel spacers. Remove from panel and keep for reuse.

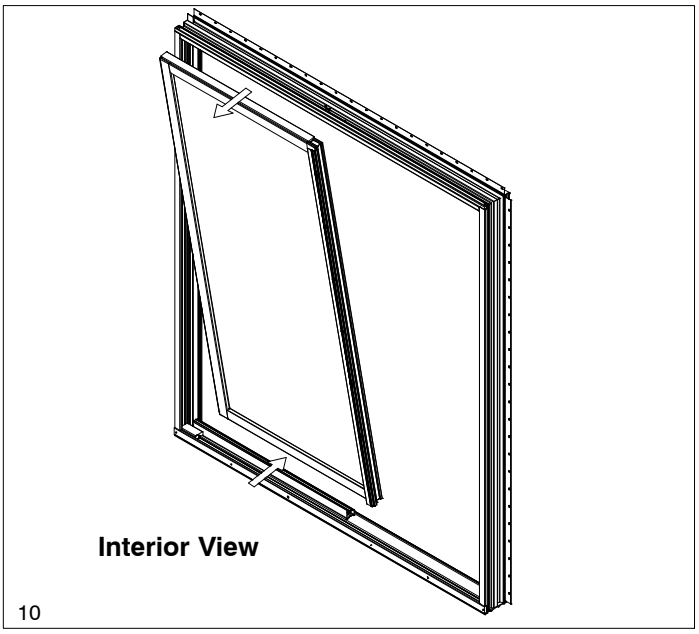

10

Stationary Panel Installation

NOTE: Before installing stationary panel, check to make sure that all weatherstrip and panel spacers are in good condition.

7. From the interior, grasp the panel firmly and set the bottom of the panel on the exterior side of the sill leveling block. Lift the panel into the Ultrex head jamb stationary channel and pull the bottom in so that it rests on the leveling block.
8. Slide the stationary panel to the stationary jamb until the stationary panel spacers engage with the jamb. Re–insert the head jamb panel spacers and foam plug.
9. Replace the stationary panel bracket on the head jamb and attach with the three #8 x 1″ Phillips self tapping pan head screws, using the existing screw holes.
10. Replace the leveling block end cap and attach to the panel with the #8 x 1″ Phillips pan head screw. Attach the end cap to the sill with the #8 x 3/8″ Phillips flathead machine screw and the #8 x 1 1/2″ pan head screw.
11. Install the operator panel (See Operator Panel Installation).
12. Check for proper panel operation.

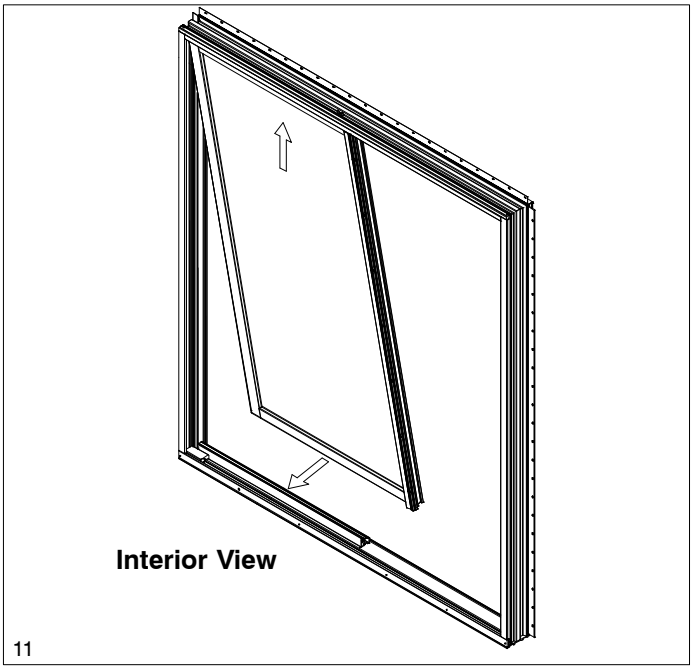

11

SERVICE – HANDLE INSTALLATION / REPLACEMENT

Tools needed: #2 Phillips screwdriver

1. Remove the two #10 x 2″ pan head screws attaching the handle to the panel.
2. Remove the interior handle and exterior handle.
3. To replace, place the interior and exterior handle on the door with the grip toward the glass. Install the two #10 x 2″ pan head screws through the handles and tighten. See illustration 12.

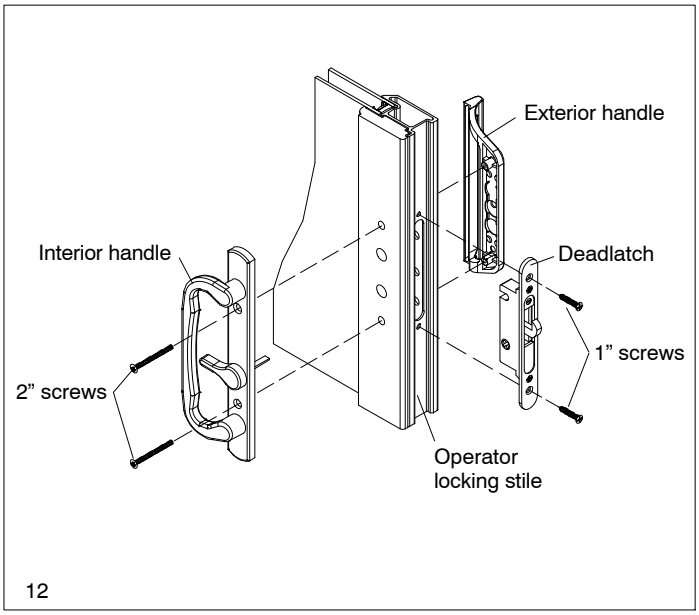

SERVICE – SILL CAP REPLACEMENT

Tools needed: Rubber mallet
Small pry bar
Pliers

Parts needed: Stainless steel sill cap

1. Remove the operator panel (see Operator Panel Replacement/Installation).
2. Using a small pry bar, lift and spread the sill cap. While prying up on sill cap grasp with a pliers and remove. See illustration 13.
3. Place the new sill cap over the Ultrex sill. Starting at the stationary jamb side, gently tap the cap into place with a rubber mallet, working toward the locking jamb. See illustration 13.

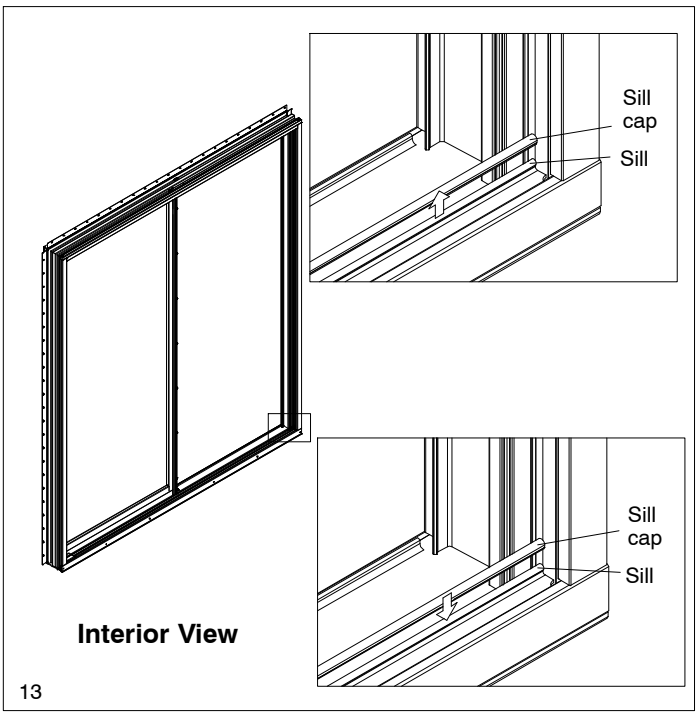

13

SERVICE – INTERLOCK REPLACEMENT

Tools needed: #2 Phillips screwdriver
flexible putty knife
Hot glue w/gun
Utility knife

Parts needed: Interlock (adhesive tape and weatherstrip included)

NOTE: The following steps apply for both operator panel interlock and stationary panel interlock removal.

1. Remove operator panel (see Operator Panel Replacement/Installation). If replacing the stationary panel interlock, remove the stationary panel as well (See Stationary Panel Replacement/Installation).
2. Using a utility knife cut away glue from top of interlock pile weatherstrip. Remove weatherstrip by sliding out from kerf in interlock as shown in illustration 14.
3. Using the #2 Phillips screwdriver remove the seven #8 x 5/8″ self tapping Phillips pan head screws (operator panel) or #8 x 1″ beige self tapping Phillips pan head screws (stationary panel) attaching the interlock to the panel.
4. Slide the flexible putty knife between the interlock and the panel to loosen the adhesive tape from the panel. Remove interlock form panel. Remove any remaining tape or adhesive residue from the panel prior to attaching new interlock.
5. Remove the pile weatherstrip from the new interlock. Dry fit the new interlock to the panel to make sure that the screw holes in the new interlock match up with the screw holes in the panel. On stationary panels, the notched end should be flush with the top of the panel. See illustration 15.

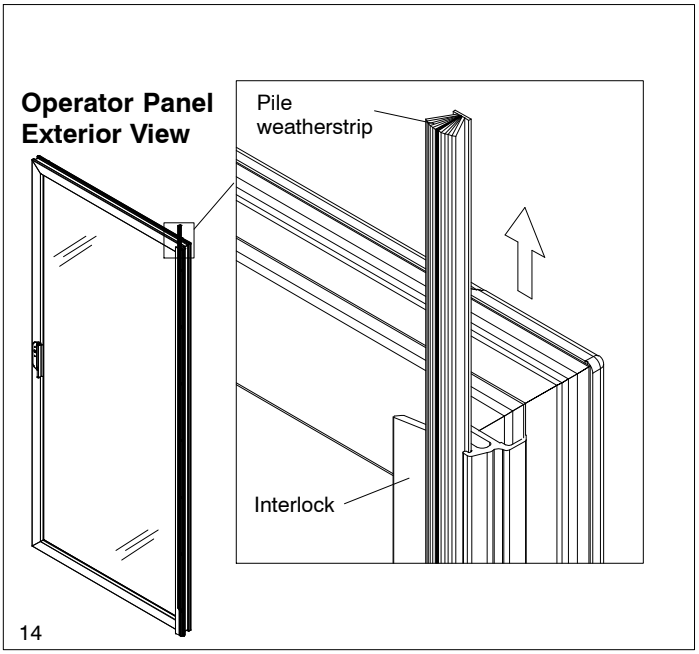

14

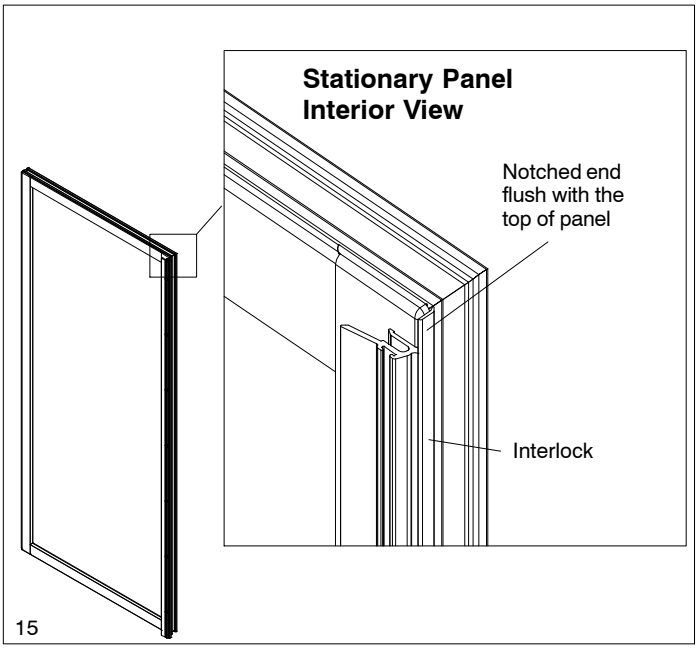

15

6. On operator panels, the notched end of the interlock should fit around the panel drip, flush with the bottom. See illustration 16.
7. If the interlock fits properly and the screw holes line up, remove the paper backing from the adhesive tape. Fit the interlock onto the panel and replace the seven #8 x 5/8″ self tapping Phillips pan head screws (operator panel) or #8 x 1″ beige self tapping Phillips pan head screws (stationary panel). See illustration 17.
8. Replace the interlock pile weatherstrip.

NOTE: If replacing operator panel interlock, place a bead of hot glue to the top of the interlock weatherstrip to prevent weatherstrip from falling out of kerf. Allow glue to dry before replacing panels.

9. Replace the panels (See Stationary Panel Removal/Installation or Operator Panel Removal/Installation).

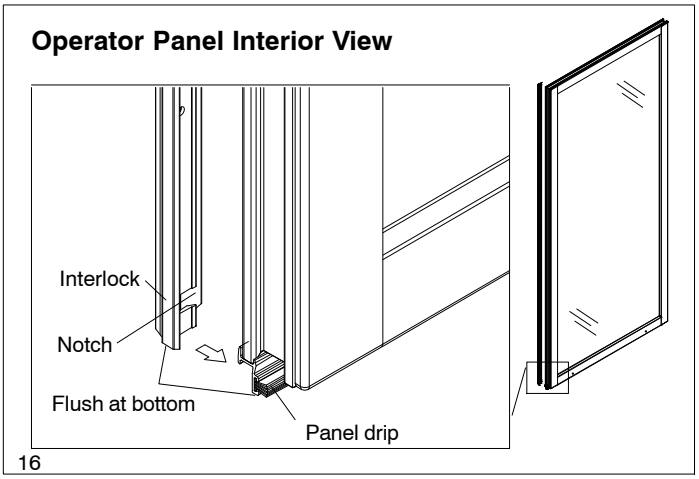

16

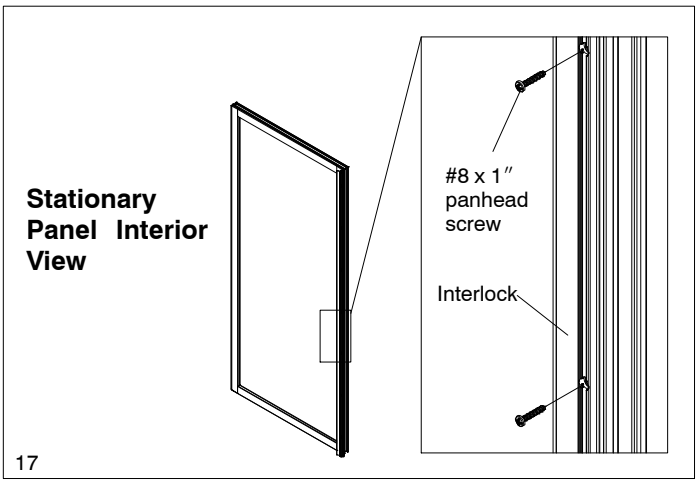

17

INSTALLING OPERATOR PANEL STOP BLOCKS

1. The following step does not apply to 3W OOX and XOO configurations. (For reference, adhesive tape is applied to the interior side of the block and is pressed against the head jamb or sill to attach.) Hold each block in place and determine which end to install the bumper in (bumper toward operator panel). Center the bumper on the interior side of the end and tap into block. See illustration 18. Remove adhesive tape backing from block. Position against the stationary side jamb as shown in illustration 18, and press into place.

NOTE: The operating panel stop blocks should be finished to match the door before installation.

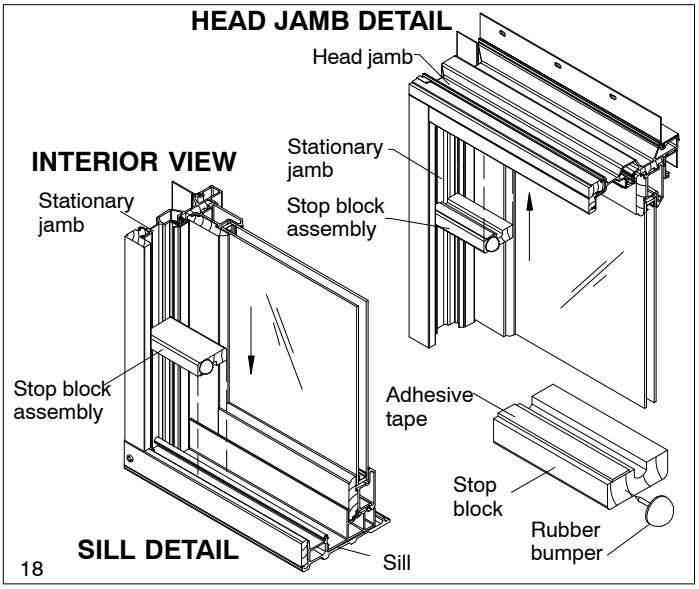

INSTALLING DOOR STOPS (3W OOX AND XOO CONFIGURATIONS)

2. Attach door stop to top and bottom of stationary panel in predrilled holes, ensuring door stop head is positioned towards the operator panel as shown in illustration 19.

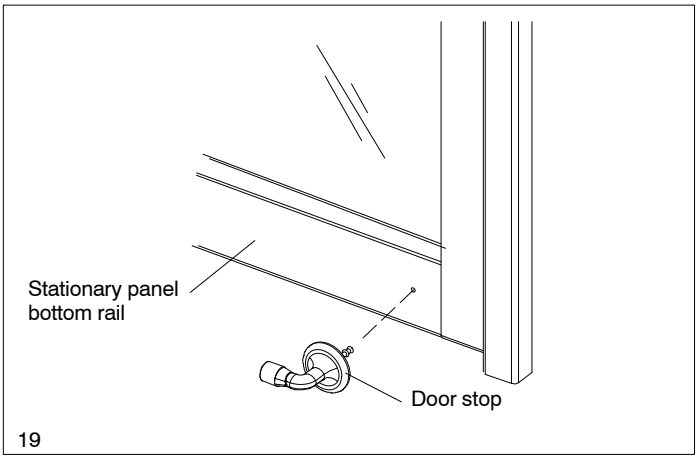

SERVICE – REMOVING EXCESS THUMB TURN PLAY

ATTENTION: This Field Service Guide corrects the side to side / in and out play on thumb turn fou in earlier versions of the Integrity Sliding Patio Door Handle.

Parts Included with Kit (Part Number 10150065)		
ILLUSTRATIONS (not to scale)	**DESCRIPTION**	**PART NUMBER**
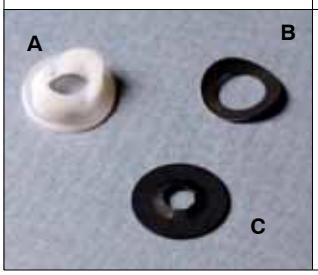	1 – Thumb turn spacer (A) 1 – Wave washer (B) 1 – Push washer (C)	10150062 10150061 10150063

YOU WILL NEED TO SUPPLY

#2 Phillips screwdriver

Putty knife or standard screwdriver

Installation Procedures

1. Remove the interior escutcheon plate from the panel by removing the two #8 x 2 1/2″ Phillips panhead screws. Using a standard screwdriver or putty knife, pry the two (2) push washers that hold the tailpiece of the thumb turn to the escutcheon plate. You will need to carefully work around the washers to remove them. See figure 1.

2. Remove the thumb turn from the escutcheon. Push the nylon thumb turn spacer into the oval turn lever hole on the handle side of the escutcheon. Slide the wave washer over the tailpiece. See figure 2.

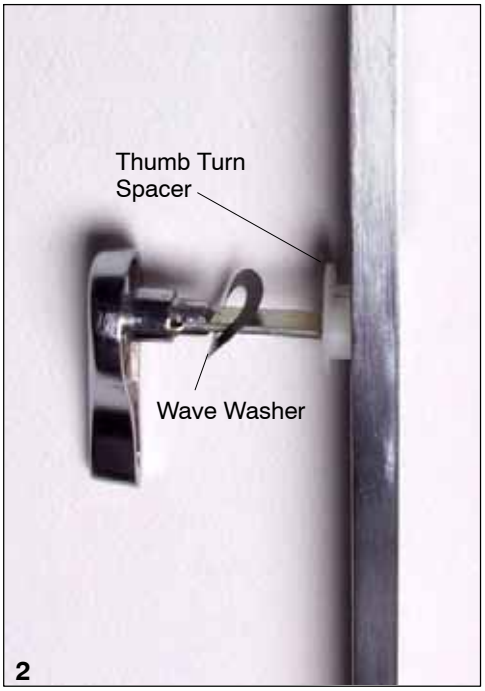

3. Insert the thumb turn and tailpiece assembly through the thumb turn spacer and replace the push washer removed earlier with the new one provided. Replace the escutcheons and fasten with the panhead screws removed earlier.

CAUTION: Do not over–seat push washer as this may not allow proper thumb turn operation.

SCREEN ADJUSTMENT PRE 5/6/03

SCREEN ADJUSTMENT

Tools needed: #2 Phillips screwdriver

1. Using the #2 Phillips screwdriver, loosen the two mounting screws from the screen roller bar.
2. Slide the screen over near the locking jamb or screen stop on 3W OXO units configurations. Check the screen frame to make sure it is parallel to the jamb or screen stop. See illustration 1.
3. When the screen is in the desired position tighten the mounting screws.
4. Check for proper screen operation. If the screen seems to drag by loosening mounting screws, lift the screen up equally on both sides, retighten mounting screws. If the bottom screen guide does not follow the sill track, or if the screen slides too easily, lower the screen by loosening the mounting screws, lower the screen frame and retighten mounting screws.

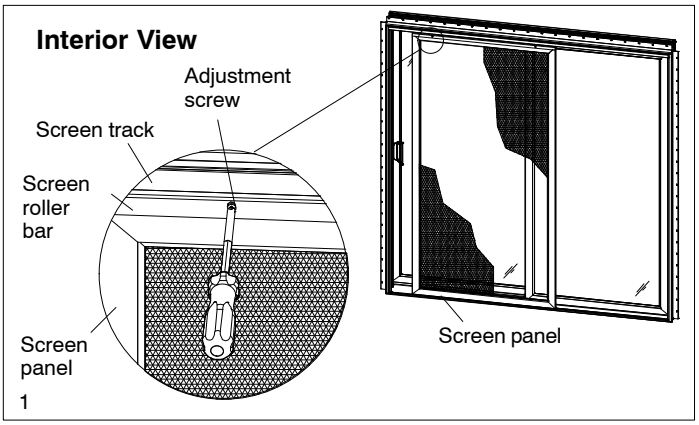

SCREEN REMOVAL/REPLACEMENT – PRE 5/6/03

SCREEN REMOVAL

1. Slide the screen toward the center of the unit.
2. Remove the two mounting screws from the screen roller bar.
3. Grasp screen near bottom, depress screen roller guide, lift screen panel and pull out toward exterior. Remove the screen from the screen roller bar. See illustration 2.

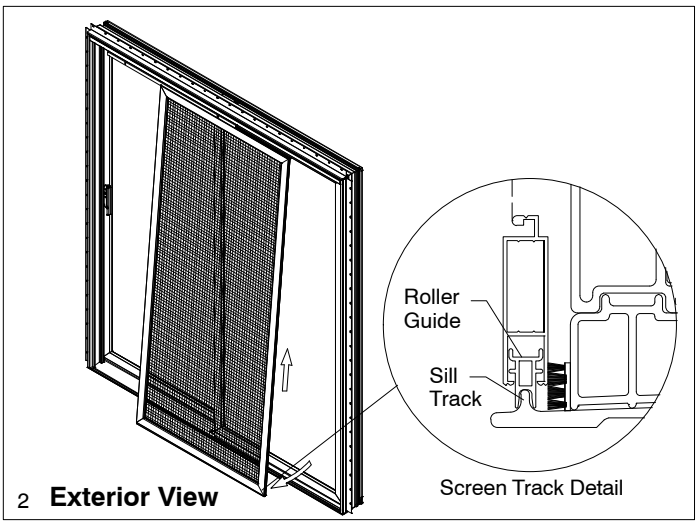

2 **Exterior View**

SCREEN REPLACEMENT

1. With the screen roller bar slid toward the center of the unit, place the top of the screen into the roller bar channel. (The holes in the screen top rail should face the exterior). Lift up gently on the bottom screen guide to compress, position on the sill screen track and release.
2. Align the holes in the screen with the mounting holes in the screen roller bar channel. Install the mounting screws but do not overtighten as some adjustment may be needed.
3. Adjust screen as needed (see Index, Screen Adjustment).Check for proper screen operation.

OPERATING PANEL REMOVAL/INSTALLATION – PRE 11/24/03

NOTE: The operator panel guide design changed on 11/24/03 to an aluminum panel guide fastener and new panel guide profile.

Removal

Tools needed: Stiff putty knife

1. With the door in a closed position, remove the operator panel guide with a stiff putty knife. Start at the operating jamb and work toward the stationary jamb as shown in illustration 6.
2. Slide the panel toward the center of the unit. Grasp the panel firmly by the stiles. Tip the top of the panel in and lift off the sill. See illustration 7.

Installation

1. To replace the operating panel, grasp the panel as in step 3. Set the panel on the sill track and move the panel back and forth to ensure that the panel rollers are on the track. See illustration 8.
2. Tip the panel in the rest of the way until it contacts the head jamb parting stop weather-strip. Slide the panel into the locking jamb and engage mortise lock, check panel to ensure it is secured to the jamb.
3. Replace the operator panel guide by inserting the barb into the kerf starting with the stationary side. Once the panel guide is inserted halfway along the unit head jamb, disengage the mortise lock and slide the operating panel towards the opposite jamb until it contacts the jamb parting stop. Press the panel guide into the kerf the rest of the way along the head jamb.
4. Check panel for proper operation.

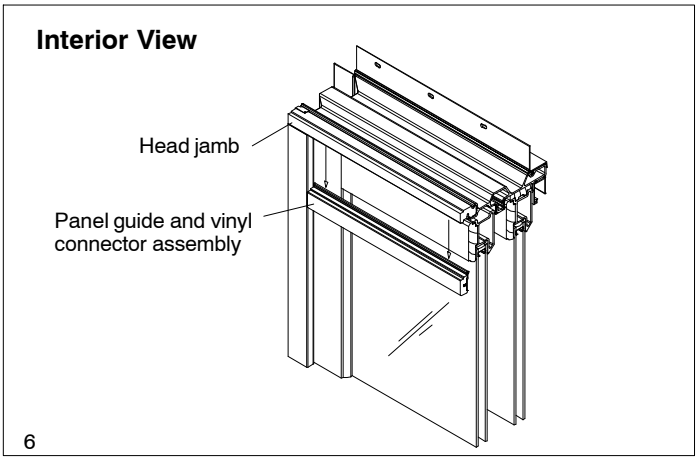

6

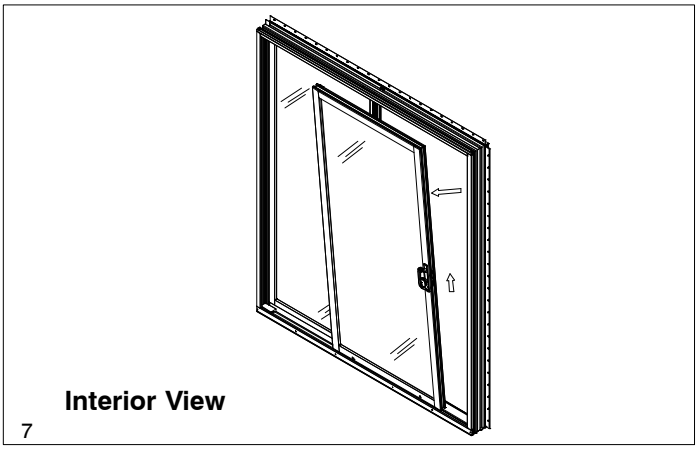

7

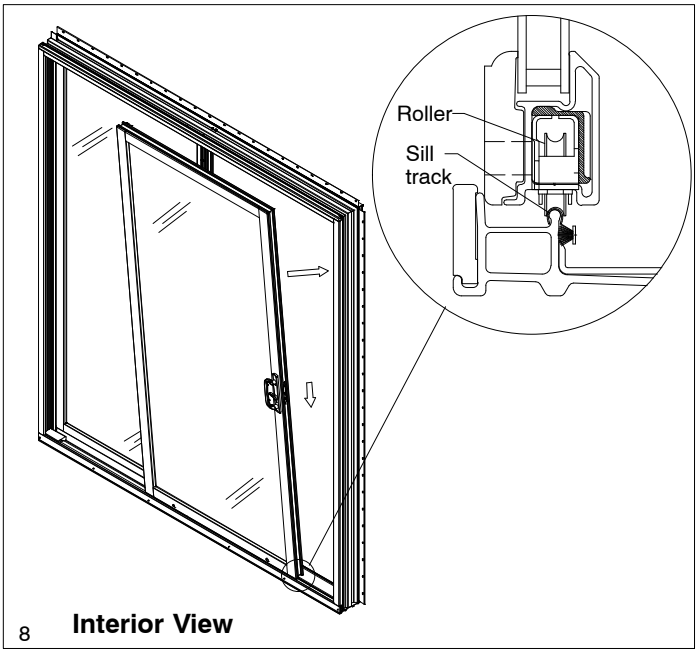

8