Infinity Casement and Awning

Unit Features 1
Lite Options 3
Minimum and Maximum Guidelines 4
Certified Sizes and Ratings 5
STC/OITC Glass Values 6
Mulling Guidelines 7
1/2" Mull Reinforcement Guidelines 8
Measurement Conversions: Operable Units 9
Measurement Conversions: Picture 10
Measurement Conversions: Egress - Easy Wash™ 11
Measurement Conversions: Egress - Clear View 12
Section Details: Operating and Picture 13
Section Details: Casing Options 14
Section Details: Mullions 15
Section Details: 1/2" Mull Reinforcement 16
Interior Frame Accessories 17

Unit Features

Infinity Casement: NCA

Infinity Awning: NAWN

Infinity Casement Picture: NCAP

Ultrex® Pultruded Fiberglass Frame:

- Frame thickness: 1 5/16" (33)
- Frame depth: 2 5/32" (55)
- Exterior colors: Stone White, Sierra, Cashmere, Pebble Gray, Bahama Brown, Bronze
- Interior colors: Stone White, Sierra, EverWood™

Ultrex® Pultruded Fiberglass Sash:

- Sash thickness: 1 3/8" (35)
- Operating sash is removable for cleaning
- Sash are replaceable but cannot be re-glazed
- Exterior colors: Stone White, Sierra, Cashmere, Pebble Gray, Bahama Brown, Bronze
- Interior colors: Stone White, Sierra, EverWood™

Casement Hardware:

- Lock and keeper:
  - Multi-point locking mechanism that is actuated from a single point of operation. Lock mechanisms are concealed with only the actuator handle and escutcheon being visible to the interior. Keepers are mounted to the interior face of the sash and interlocks within concealed lock when actuated.
- Operator:
  - Concealed hinges with stainless steel tracks
  - Snubber: pulls the sash tight to the frame and provides positive engagement to secure the sash under structural load conditions
  - Dual arm roto-gear operator on units 24 3/8" (619) wide frame size and over
  - Split-arm roto-gear operator used on units less than 24 3/8" (619) wide
- Handle:
  - Die-cast folding crank handle
- Factory installed Window Opening Control Device (WOCD):
  - Minimum Frame OSM 18 5/32" (461) x 17 3/8" (441)
  - Maximum Frame OSM 40" (1016) x 60" (1524) or 36" (914) x 86" (2184)
  - WOCD locking assembly:
    - Factory installed
    - Die-cast
    - Color: White, Satin Taupe, Sierra
  - WOCD tether assembly: factory installed, glass filled nylon
    - Color: E-Gard color match

Awning Hardware:

- Lock and keeper:
  - Cam lock and stainless steel keeper system
- Operator:
  - Concealed hinges and steel tracks
  - Factory installed roto-gear operator
- Handle:
  - Die-cast folding crank handle

Weather Strip:

- Frame:
  - Extruded foam bulb weather strip that runs around the perimeter of the frame sealing against the interior face of the sash
    - Color: black
- Sash:
  - Extruded thermoplastic bulb that attaches to a kerf around the top, bottom and sides of the sash; sealing against the inner perimeter of the frame
    - Color: beige or black
    - Black is for Bahama Brown and Bronze exterior units

Unit Features:

Insect Screens:

- Full screen
- Roll formed aluminum frame
- Mitered corner key; injection molded, color matched to screen
- Color: Stone White, Satin Taupe, Sierra, EverWood™
- Standard screen mesh material: charcoal fiberglass
  - Optional screen mesh material: high transparency

Glass:

- Glazing seal: silicone bedding on interior and exterior
- Standard glass: LoĒ²-272® with Argon or air
- Optional glazing available: LoĒ-180™ with Argon or air, LoĒ³-366® with Argon or air, or LoĒ³-366®/i89 with Argon or air, clear, tints, tempered, obscure
- Decorative glass options include Glue Chip, Rain, Reed, Narrow Reed, or Frost
- Decorative glass is not available with LoĒ-180™, LoĒ³-366®/i89, or STC/OITC
- Rain, Reed and Narrow Reed not available with SDL
- SDL available on Frost, annealed or tempered glass
- SDL available on Glue Chip, tempered glass required
- Insulating glass will be altitude adjusted with capillary tubes for higher elevations
- Argon gas is not available for elevations that require capillary tubes

Simulated Divided Lites (SDL):

- 7/8" (22) SDL bar (interior and exterior)
- 2 11/32" (30) simulated rail (interior and exterior)
- Exterior color: matched to unit exterior
- Interior color: matched to interior - ABS material
- Pattern: equal rectangular, cottage, prairie, check rail

Gilles-Between-the-Glass (GBG):

- 11/16" (18) or 1" (25) contoured aluminum bar
- Exterior: color matched to unit exterior
- The exterior GBG color is designed to best match the unit exterior color when used with LoĒ glass. The use of different types of glazing options may alter the exterior GBG color appearance.
- Interior color: White, Satin Taupe, Sierra, Bronze
- Pattern: equal rectangular, cottage, prairie, check rail

Lite Options

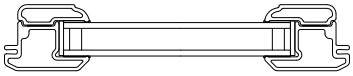

Insulating Glass

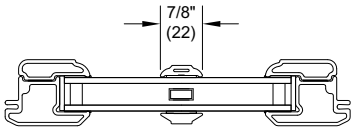

Insulating Glass
SDL w/ spacer bar

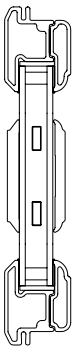

Insulating Glass
SDL Simulated Rail
w/ spacer bar

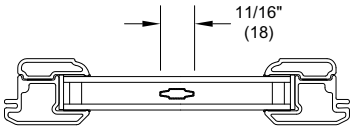

11/16" Insulating Glass
GBG

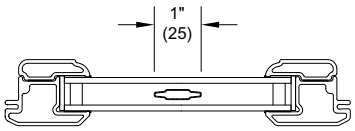

1" Insulating Glass
GBG

Minimum and Maximum Guidelines

Minimum and Maximum Guidelines										
Unit Type	Frame Size								Glass Limits	
	Min Width		Min Height		Max Width		Max Height		Max Glass	
	in	mm	in	mm	in	mm	in	mm	ft^2	m^2
NCA	16 1/4	(413)	17 3/8	(441)	40	(1016)	60	(1524)	13 29/32	1.292
	16 1/4	(413)	17 3/8	(441)	36	(914)	86	(2184)	18 3/32	1.681
NAWN	17 1/2	(445)	17 3/8	(441)	60	(1524)	48	(1219)	17	1.579
NCAP/ NAWNP	14 1/4	(362)	14 1/4	(362)	86	(2184)	86	(2184)	30	2.787

NOTE: Obscure glass size width or height must be less than 83"
Tempered glass size width or height must be less then 60"
Tempered is required if glass size exceeds 25 square feet
For Glue Chip, Frost, and Rain, maximum short frame / frame width is 63 1/8"
For Reed and Narrow Reed, vertical pattern orientation maximum frame width size 63 1/8"
For Reed and Narrow Reed, horizontal pattern orientation maximum sash height 63 1/8"

Certified Sizes and Ratings

Product	Air Tested to psf	Water Tested to psf	Design Pressure (DP)	Certification Rating	Max Overall Width		Max Overall Height	
					in	mm	in	mm
Infinity Casement	1.57	6.00	40.0	R-PG40-C	36	(914)	86	(2184)
Infinity Casement	1.57	6.00	40.0	LC-PG40-C	31	(787)	86	(2184)
Infinity Casement	1.57	6.00	40.0	LC-PG40-C	40	(1016)	60	(1524)
Infinity Casement	1.57	6.00	40.0	LC-PG40-C	36	(914)	72	(1829)
Infinity Casement	1.57	6.00	40.0	R-PG40-C	24 23/64	(619)	86	(2184)
Infinity Casement	1.57	6.00	40.0	LC-PG40-C	21 3/8	(543)	86	(2184)
Infinity Casement (clear view hinges)	1.57	6.00	40.0	LC-PG40-C	30 23/64	(771)	57	(1448)
Infinity Casement (clear view hinges)	1.57	6.00	40.0	R-PG40-C	30 23/64	(771)	72	(1829)
Infinity Awning	1.57	6.00	40.0	LC-PG40-AP	60	(1524)	48	(1219)
Infinity Casement Picture	1.57	6.00	40.0	LC-PG40-FW	86	(2184)	86	(2184)

STC/OITC Glass Values

This glazing option incorporates 3.1mm/4.7mm variable thickness glass to increase STC/OITC performance and improve sound abatement. Infinity's STC/OITC upgrade includes third party ASTM ratings and reports. STC/OITC ratings for this option and for standard 3.1mm/3.1mm insulating glass are shown in the attached chart.

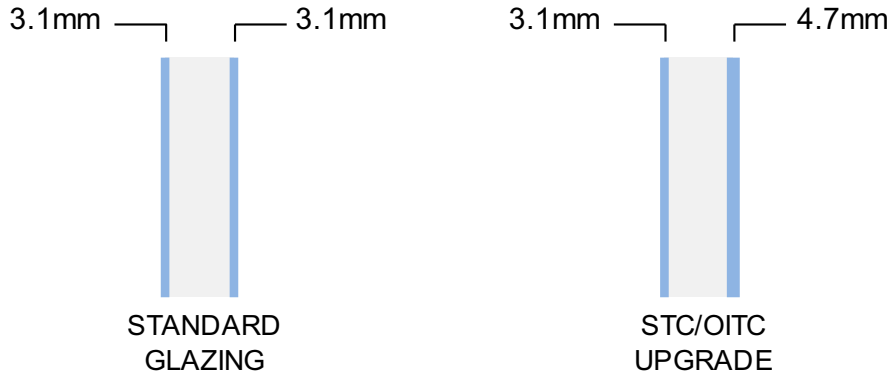

Product Type	Exterior Glazing	Airspace	Interior Glazing	STC	OITC
Full Frame Casement	1/8" (3.1)	15/32" (11.5)	1/8" (3.1)	28	25
	1/8" (3.1)	13/32" (9.8)	3/16" (4.7)	32	27
Full Frame Casement Picture	1/8" (3.1)	15/32" (11.5)	1/8" (3.1)	27	24
	1/8" (3.1)	13/32" (9.8)	3/16" (4.7)	32	27
Full Frame Awning	1/8" (3.1)	15/32" (11.5)	1/8" (3.1)	29	25
	1/8" (3.1)	13/32" (9.8)	3/16" (4.7)	33	28

Mulling Guidelines

Factory Mulled Casement/Awning Assemblies

- Assemblies up to 4 units wide by 1 unit high
  - MAXIMUM ROUGH OPENING not to exceed 113" (2870) x 86 1/2” (2197)
- Assemblies up to 1 unit wide by 2 units high
  - MAXIMUM ROUGH OPENING not to exceed 73" (1854) x 96" (2438)

NOTE: Field mulling beyond the above limitations is not recommended.

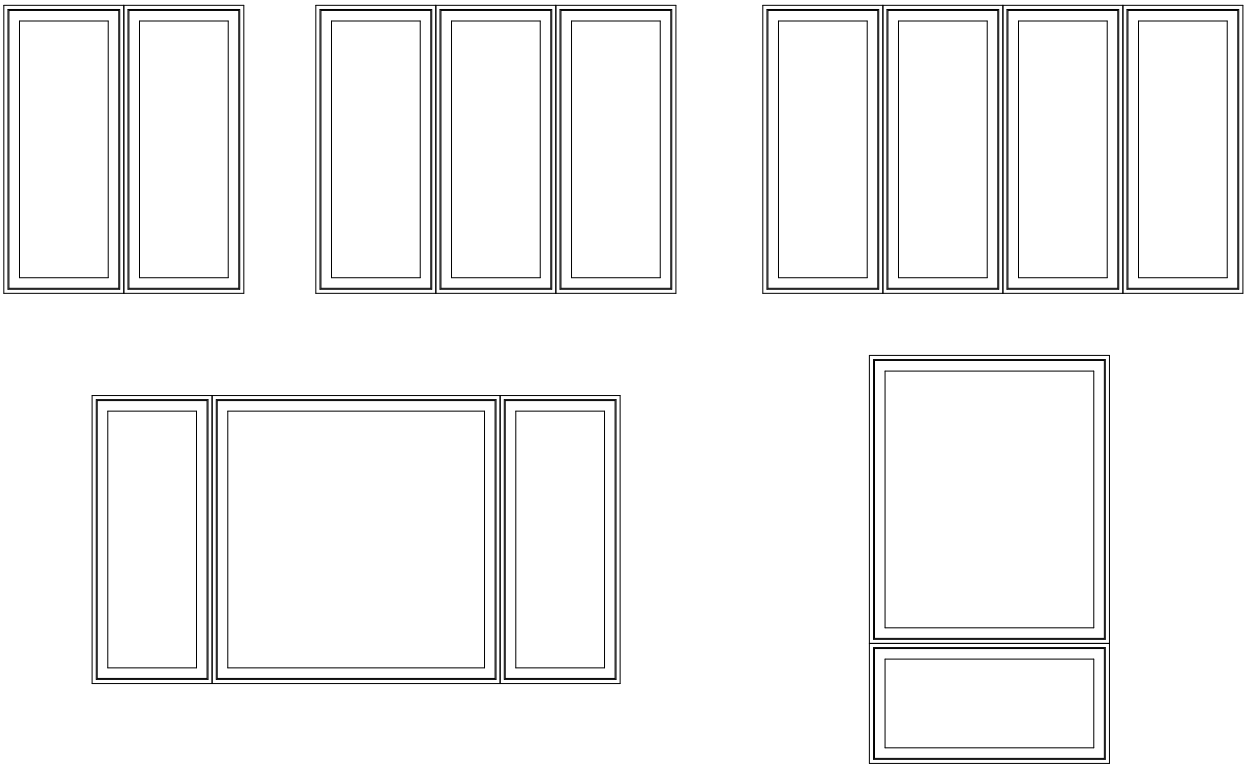

Rough Opening Assemblies

- WIDTH:
  - Frame Width = Single unit Rough Opening width MINUS 1"
  - Total Rough Opening Width = ADD all frame widths PLUS 1"
- HEIGHT:
  - Frame Height = Single unit Rough Opening height MINUS 1/2"
  - Total Rough Opening Height = ADD all frame heights PLUS 1/2"

1/2" Mull Reinforcement Guidelines

Factory Mulled 1/2" Mull Reinforcement Casement/Awning Assemblies

- Assemblies up to 4 units wide by 1 unit high
  - MAXIMUM ROUGH OPENING not to exceed 113" (2870) x 96 1/2” (2451)
- Assemblies up to 1 unit wide by 2 units high
  - MAXIMUM ROUGH OPENING not to exceed 73" (1584) x 96 1/2" (2451)
- Assemblies up to 2 units wide by 2 units high
  - MAXIMUM ROUGH OPENING not to exceed 97 1/2" (2477) x 96 1/2" (2451)
  - MAXIMUM ROUGH OPENING not to exceed 113" (2870) x 86 1/2" (2197)

NOTE: Field mulling beyond the above limitations is not recommended.

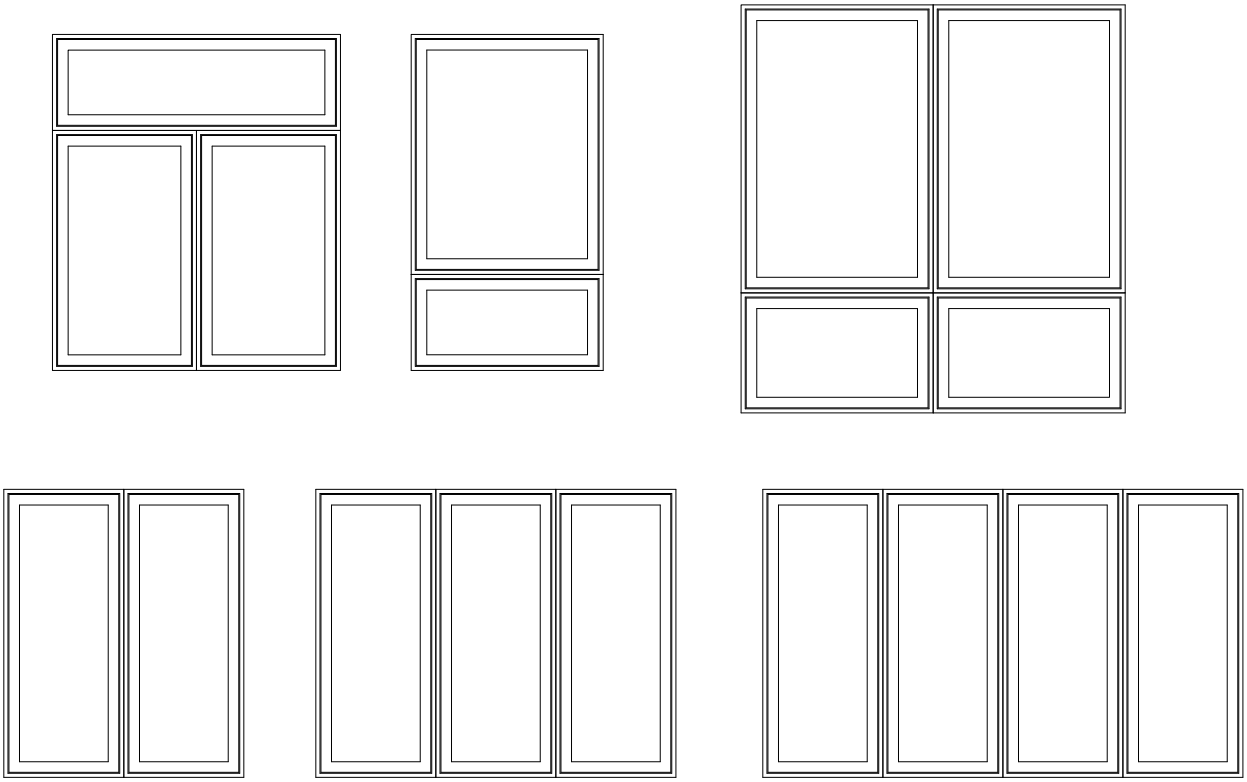

Rough Opening Assemblies

- WIDTH:
  - Frame Width = Single unit Rough Opening width MINUS 1"
  - Total Rough Opening Width = ADD all frame widths PLUS 1/2" for each Vertical Mull Reinforcement PLUS 1"
- HEIGHT:
  - Frame Height = Single unit Rough Opening height MINUS 1/2"
  - Total Rough Opening Height = ADD all frame heights PLUS 1/2" for each Horizontal Mull Reinforcement PLUS 1/2"

Measurement Conversions: Operable Units

Unit Measurements - Operator Casement and Awning		Width		Height	
From	**To**				
Rough Opening		**in**	**mm**	**in**	**mm**
MO with BMC	Rough Opening	-2 1/4	(57)	-1 11/16	(43)
Masonry Opening	Rough Opening	+ 1/2	(13)	+ 1/4	(6)
OM of Frame	Rough Opening	+ 1	(25)	+ 1/2	(13)
Daylight Opening	Rough Opening	+ 6 7/32	(158)	+ 5 23/32	(145)
Frame		**in**	**mm**	**in**	**mm**
Daylight Opening	OM of Frame	+ 5 7/32	(132)	+ 5 7/32	(132)
Sash		**in**	**mm**	**in**	**mm**
OM of Frame	OM of Sash	-1 11/16	(43)	-1 11/16	(43)
Daylight Opening	OM of Sash	+ 3 17/32	(90)	+ 3 17/32	(90)
Glass		**in**	**mm**	**in**	**mm**
Daylight Opening	Glass	+ 1 1/16	(27)	+ 1 1/16	(27)
Screen		**in**	**mm**	**in**	**mm**
OM of Frame	OM of Screen, Non-EverWood	-3 7/8	(98)	-4 5/16	(109)
OM of Frame	OM of Screen, EverWood	-3 29/32	(99)	-4 5/16	(109)
Daylight Opening	Non-EverWood Screen OM	+ 1 11/32	(34)	+ 29/32	(23)
Daylight Opening	EverWood Screen OM	+ 1 5/16	(33)	+ 29/32	(23)

Measurement Conversions: Picture

Unit Measurement - Transom and Picture		Width		Height	
From	**To**				
Rough Opening		**in**	**mm**	**in**	**mm**
MO with BMC	Rough Opening	-2 1/4	(57)	-1 11/16	(43)
Masonry Opening	Rough Opening	+ 1/2	(13)	+ 1/4	(6)
OM of Frame	Rough Opening	+ 1	(25)	+ 1/2	(13)
Daylight Opening	Rough Opening	+ 6 7/32	(158)	+ 5 23/32	(145)
Frame		**in**	**mm**	**in**	**mm**
Daylight Opening	OM of Frame	+ 5 7/32	(132)	+ 5 7/32	(132)
Sash		**in**	**mm**	**in**	**mm**
OM of Frame	OM of Sash	-1 11/16	(43)	-1 11/16	(43)
Daylight Opening	OM of Sash	+ 3 17/32	(90)	+ 3 17/32	(90)
Glass		**in**	**mm**	**in**	**mm**
Daylight Opening	Glass	+ 1 1/16	(27)	+ 1 1/16	(27)

Measurement Conversions: Egress - Easy Wash™

Egress Conversions		
Easy Wash™ Egress Minimum Opening and Conversions from Frame Size		
Minimum Value for Net Clear Opening	**Desired Dimension**	**Formula**
20 in	Egress opening width, in	= NCA frame OM width - 10.352
24 in	Egress opening height, in	= NCA frame OM height - 4.816
5.7 ft2	Egress opening area, ft2	= ((Egress opening width, in) x (Egress opening height, in)) / 144

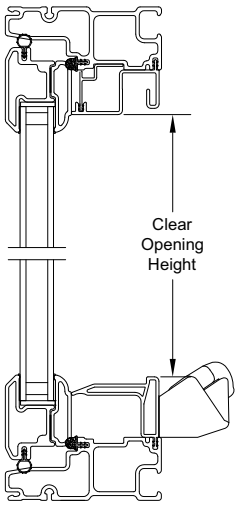

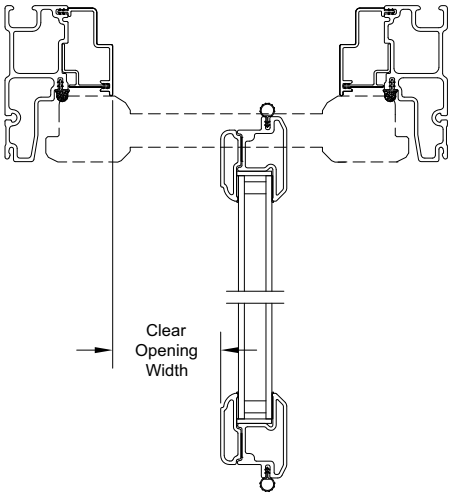

Easy Wash™ Hinge

Measurement Conversions: Egress - Clear View

Egress Conversions		
Clear View™ Egress Minimum Opening and Conversions from Frame Size		
Minimum Value for Net Clear Opening	**Desired Dimension**	**Formula**
20 in	Egress opening width, in	= NCA frame OM width - 5.967
24 in	Egress opening height, in	= NCA frame OM height - 4.816
5.7 ft2	Egress opening area, ft2	= ((Egress opening width, in) x (Egress opening height, in)) / 144

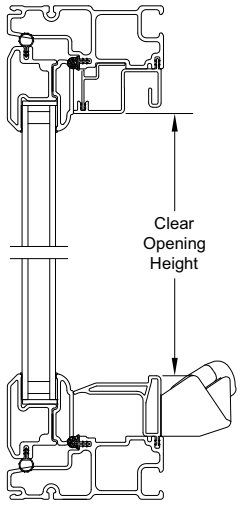

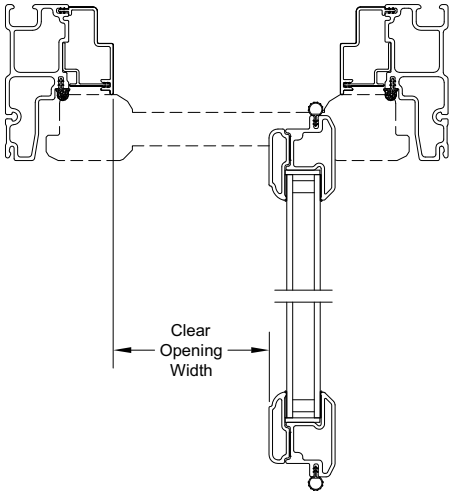

Clear View™ Hinge

Section Details: Operating and Picture

Scale: 3" = 1' 0"

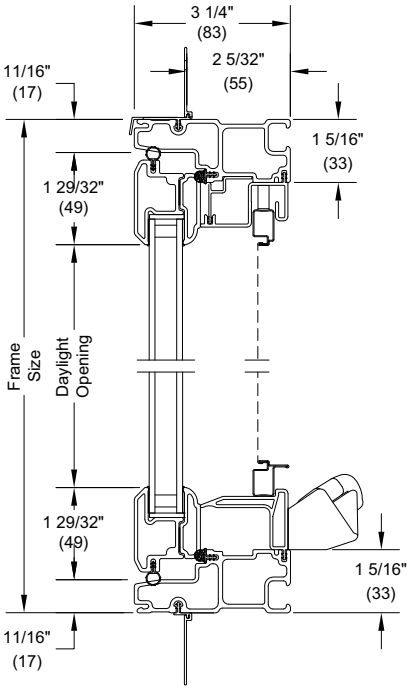

Head Jamb and Sill

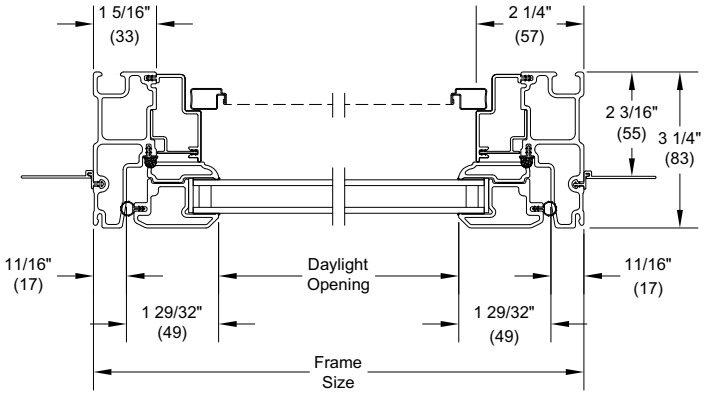

Jambs

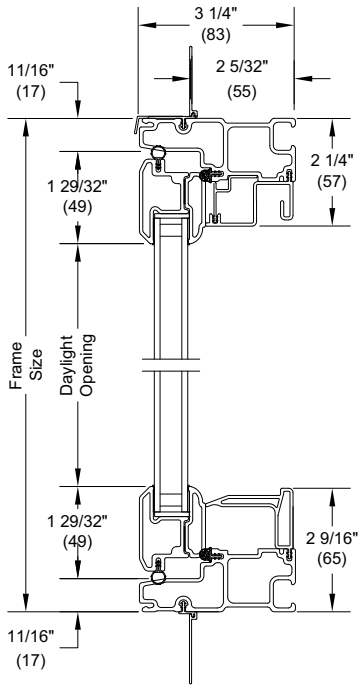

Head Jamb and Sill

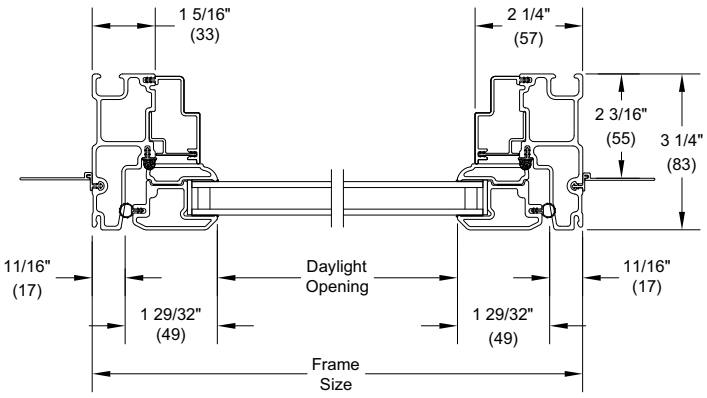

Jambs

Section Details: Casing Options

Scale: 3" = 1' 0"

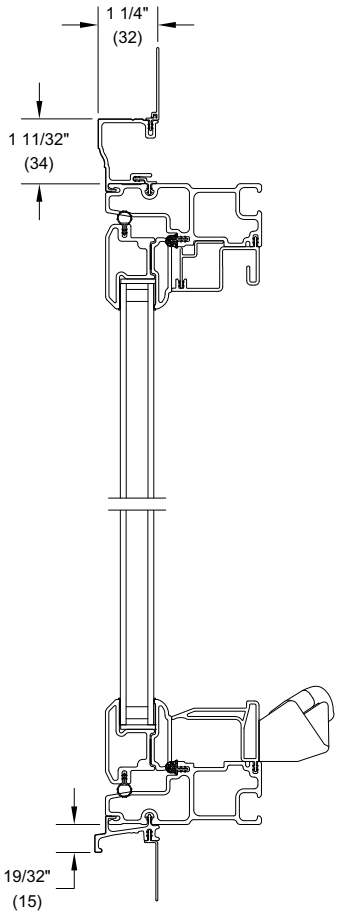

Brick Mould Casing

Section Details: Mullions

Scale: 3" = 1' 0"

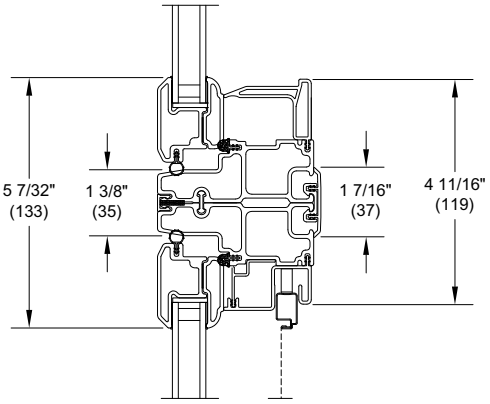

Horizontal
Mullion-Operator/Picture

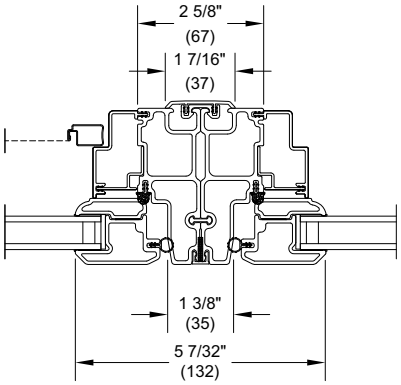

Vertical
Mullion-Operator/Picture

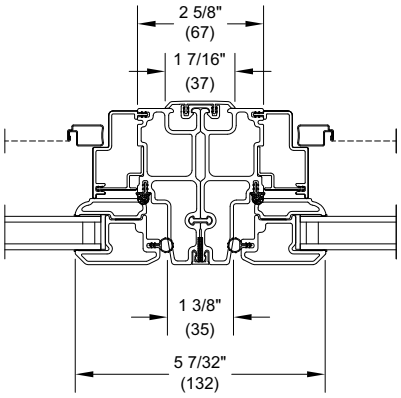

Vertical
Mullion-Operator/Operator

Section Details: 1/2" Mull Reinforcement

Scale: 3" = 1' 0"

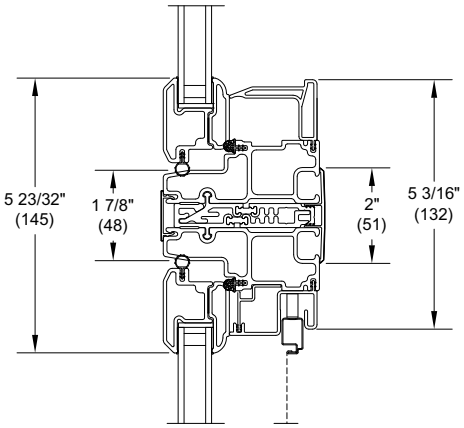

1/2" Mull Reinforcement
Picture/Operator
NCAP,NAWNP/NCA,NAWN

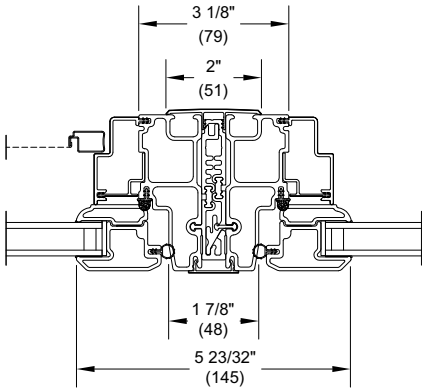

1/2" Mull Reinforcement
Operator/Picture
NCA,NAWN/NCAP,NAWNP

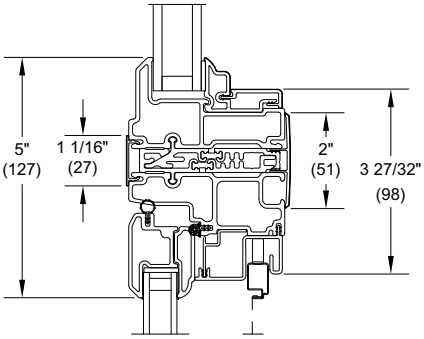

1/2 " Mull
Reinforcement
NCA,NAWN/NDGRT,NPDG

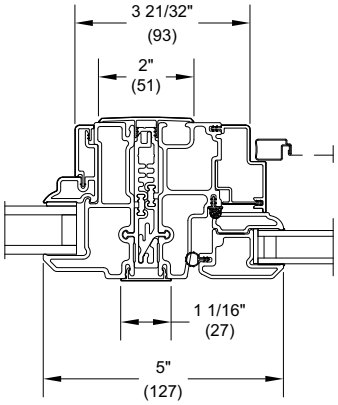

1/2" Mull
Reinforcement
NCA,NAWN/NPDG

Interior Frame Accessories
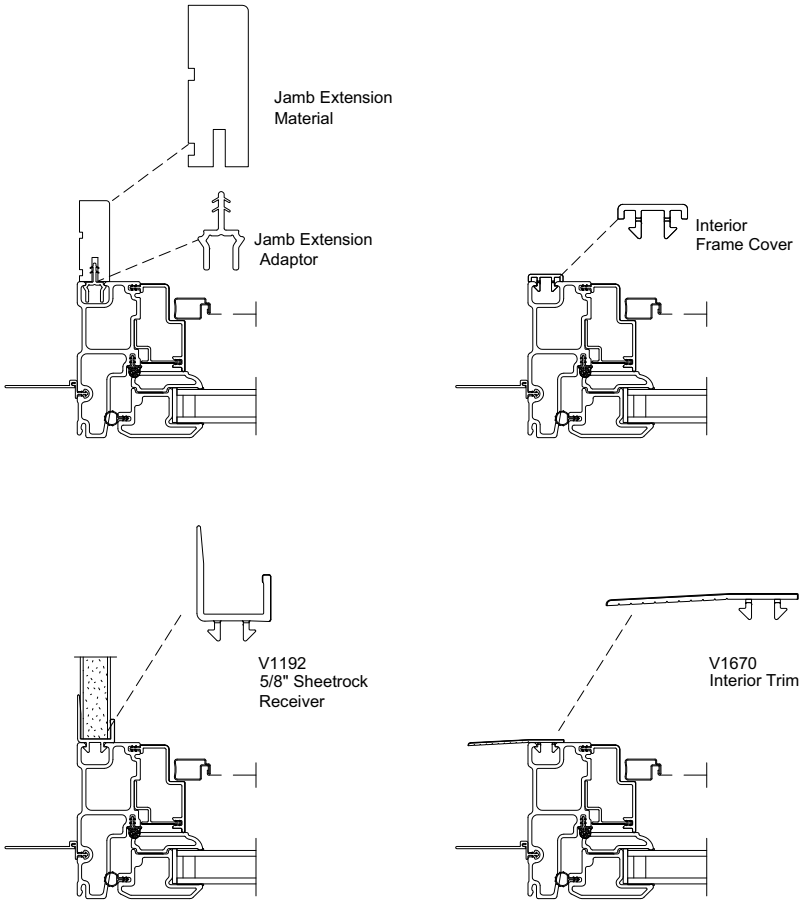
Scale: 3" = 1' 0"