IZ3 Wood Ultimate Double Hung
Supplemental Installation Instruction

These instructions are appicable for Wood Ultimate Double Hung IZ3.

NOTE: Numbers listed in parentheses ( ) are metric equivalents in millimeters rounded to the nearest whole number.

IMPORTANT

Please follow all instructions included with unit. For instructions on how to prepare an opening for your window, refer to "Window Rough Opening Prep and Flashing" instruction. For more details on structural fastening, refer to the structural installation instructions found with your unit, online at www.marvin.com**,** or contact your Marvin representative**.**

Fastening Options

Installation methods outlined in this instruction are BMC nailing using installation brackets, through jamb fastening and structural brackets.

BMC Nailing Using Installation Brackets

*NOTE: BMC nailing only is **not** an approved method for fastening IZ3 units.*

1. Apply bead of sealant between the casing ends and the sill horn as well as the mitered corners at the top of the casing. Tool sealant around Brick Mould Casing (BMC). See figure 1.

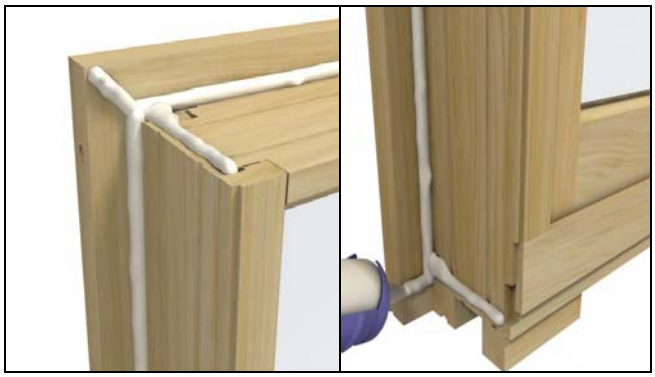

Figure 1

2. Apply installation brackets and install unit per wood unit installation instructions. See figure 2.

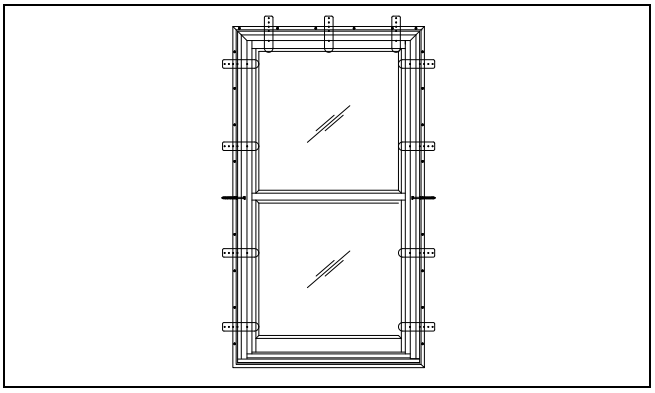

Figure 2

3. Fasten the BMC with 16d casing nails spaced 4" (102) maximum from corners and 8" (203) maximum around perimeter. See figure 3.

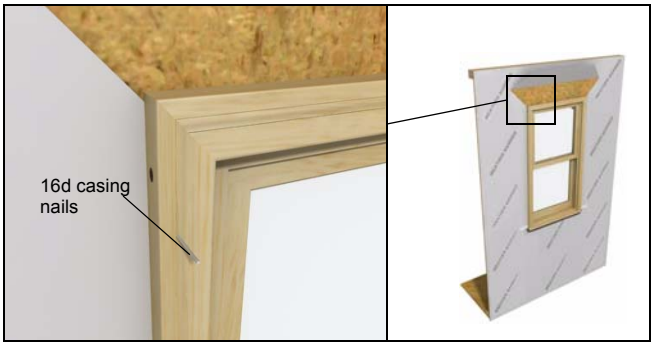

Figure 3

4. Wrap installation brackets to interior and fasten with #8 x 1 1/2" screws.

5. Remove check rail fuzzy, see figure 4a. Install screws through check rail and then reinsert check rail fuzzy. See figure 4b.

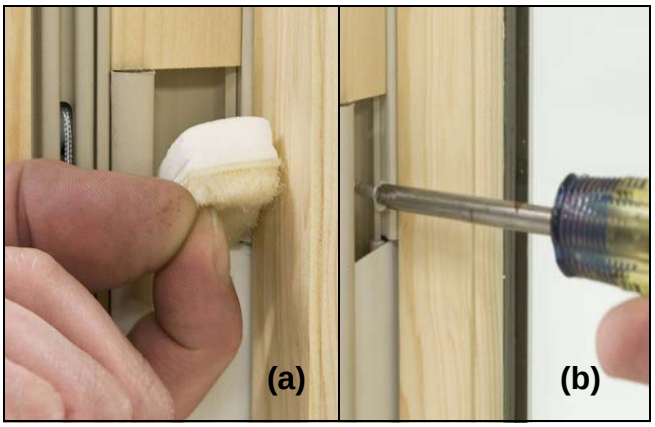

Figure 4

Through Jamb Fastening

1. Locate the screw in the jamb carrier kerf (jambs) and above the top sash (head jamb).

2. Make sure to countersink the screw so that it doesn't interfere with installation of the jamb liner. See figure 5.

Figure 5

3. Space fasteners along jambs and head jambs no more than 6″ (152) from each corner and 15″(381) on center.

4. Install screws through check rail. See figure 4.

Structural Brackets

NOTE: For more information on structural bracket installation, please refer to the instructions included with your unit.

1. Structural brackets require spacing 6″ (152) from all corners and 15″ (381) on center around the perimeter. See figure 6.

Figure 6

2. Wrap brackets around the framing/buck/opening, fasten with two #8 x 1 1/2″ screws. Angle the screws approximately 15° away from the window. Always shim above or behind installation brackets. See figure 7.

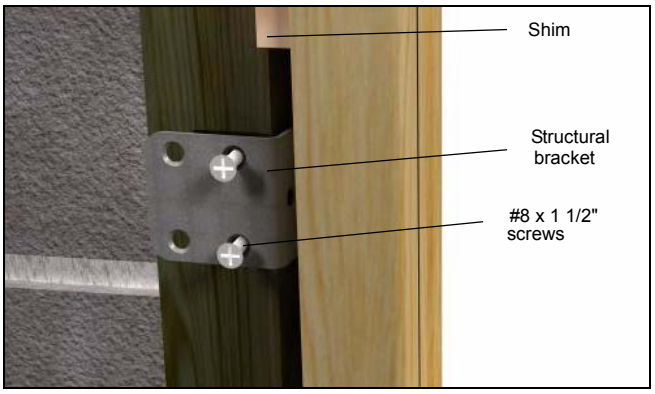

Figure 7

3. Remove check rail fuzzy. Install screws through checkrail and reinsert check rail fuzzy. See figure 4.

NOTE: Single UDH products do not require fastening at the sill. Multiple wide UDH assemblies require anchoring at the sill mullion.

Mulled Units

NOTE: All mulled units require fastening with two screws or structural brackets on each side of the mull joint. Spacing shall be no more than 6″ (152) from mull joint. Additional brackets should be placed at the corners to level unit. See figure 8.

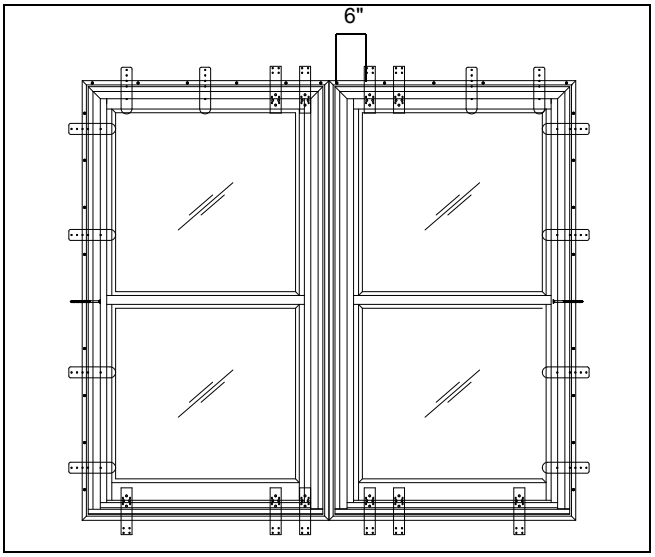

Figure 8