Integrity Service - Double Hung

HP Sill Liner Field Applied Installation Instructions

ATTENTION: The IDH HP kit is intended and warranted only for applications to IDH products sold after 1/1/03. Any other use of this kit is optional and does not infer any improvement of performance higher than stated for original product. If the IDH HP kit will be installed on any unit ordered prior to 1/20/03, replacement tilt latches must be ordered to achieve the certified structural performance rating.

WARNING: Practice Safety! Always wear safety glasses and other appropriate safety equipment when servicing Integrity products.

PARTS SUPPLIED WITH HP KIT

ILLUSTRATIONS (not to scale)	DESCRIPTION
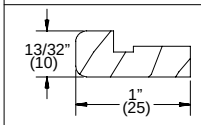 W8088 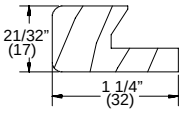 W8586	1-HP Sill Liner (W8088 operator or W8586 Picture/Transom) with adhesive tape applied (not shown)
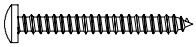	4-#8 x 1 1/2″ Panhead screws

NOTE: Numbers listed in parentheses ( ) are metric equivalents in millimeters rounded to the nearest whole number.

YOU WILL NEED TO SUPPLY

Safety glasses	Stiff putty knife
Pencil	Power drill/driver with #2 Phillips bit
3/16″ (5) drill bit	3/8″ (10) drill bit
Caulking gun	
Sealant - Grade NS Class 25 per ASTM C920	

ADDITIONAL HP UNIT INSTALLATION PROCEDURES

NOTE: NOTE: For new construction applications, it may be desirable to use structural brackets in place of screws. Follow instructions (part number 11708423) included with the brackets. Install brackets, follow installation instructions included with the window, and proceed to HP Sill Liner Installation steps on page 2.

ATTENTION: The following steps are intended as a supplement to installation instructions included with the product. Performing these steps in addition to those outlined in the installation instructions, will ensure that the installed unit is certified to DP rating stated on WDMA label included with product.

1. Once the unit has been installed and is flush and square in opening, remove the top and bottom sash (operator units only). On picture units, remove the wood jamb liners with a stiff putty knife. If the vinyl weatherstrip does not come off with stop, remove this in the same manner. See illustration 1. Set both aside for reuse later.

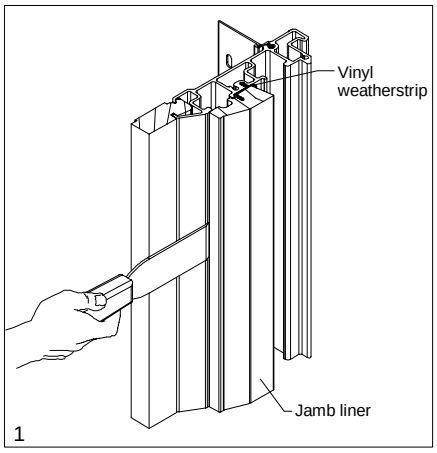

1

2. On operator units, carefully remove the jamb weatherstrip from both jambs. Starting at the bottom, use a stiff putty knife to pry the weatherstrip from the kerf and carefully remove. See illustration 2. Take care not to damage the weatherstrip as it will be reused later.

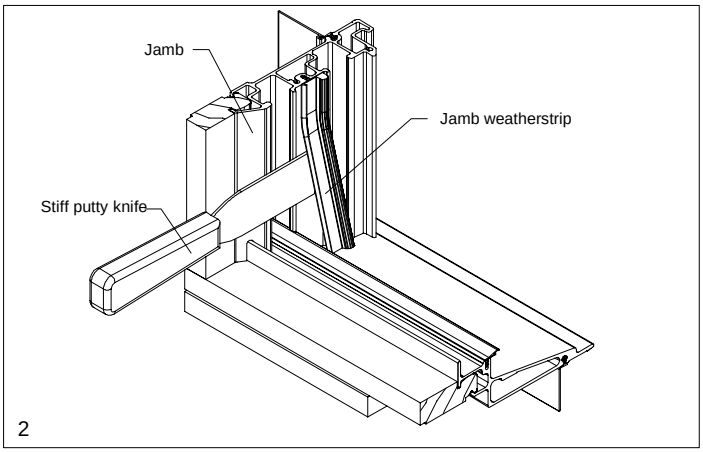

2

3. Drill two holes in each jamb, one 6″ (152) from the sill and another 6″ from the head jamb. On operator units, locate the holes on the weatherstrip kerf and drill through both layers of Ultrex with a 3/16″ drill bit. On picture units the hole will be located in the bottom sash balance tube cavity (exterior wall only). See illustration 3.

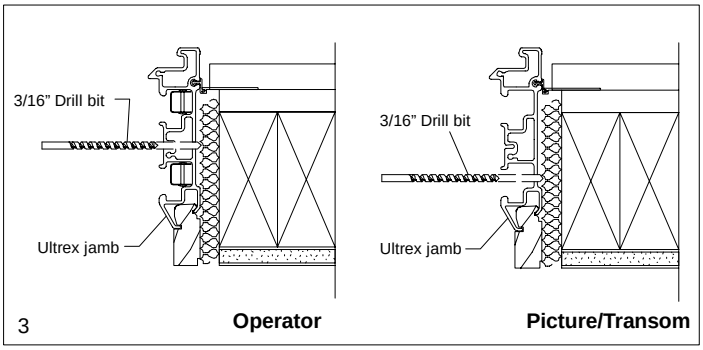

3

4. On operator units only, increase the hole diameter in the interior wall with a 3/8″(10) drill bit. See illustration 4. This will allow access for a screwdriver.

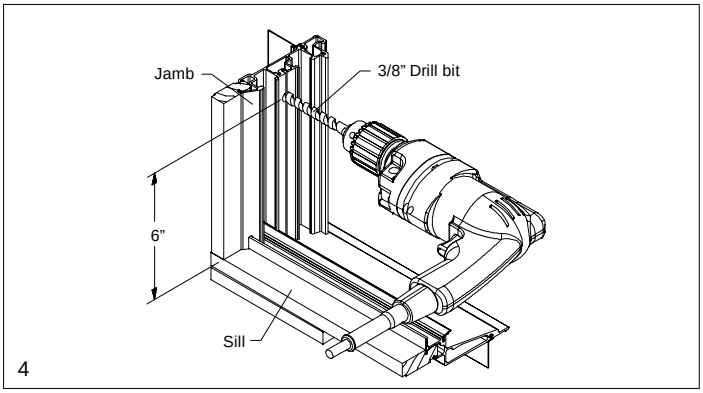

4

2/6/03
19970048

5. Apply shims at screw hole locations, taking care not to bow jambs. Drive the #8 x 1 1/2″(38) screws through holes to secure unit to the rough opening. See illustration 5. Check for frame squareness and adjust shims and screws as necessary.

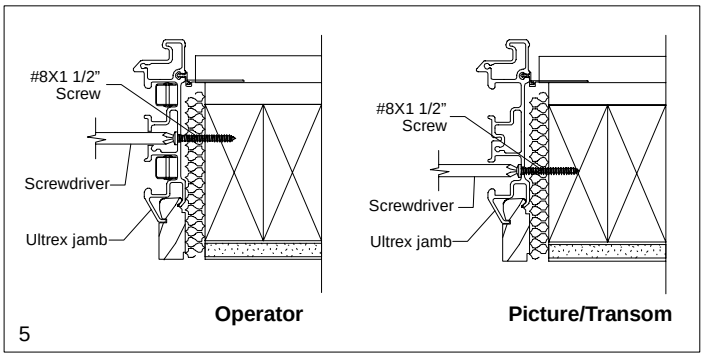

6. Finish and seal installation as described in installation instructions.

7. Replace jamb liners (picture units) or jamb weatherstrip and sash (operator units).

8. Raise bottom sash (on operators).

HP SILL LINER INSTALLATION

9. Temporarily set HP sill liner against Ultrex® sill liner as shown. Mark the top of the extension on both jambs with a pencil. See illustration 6. Remove the HP sill liner and set aside.

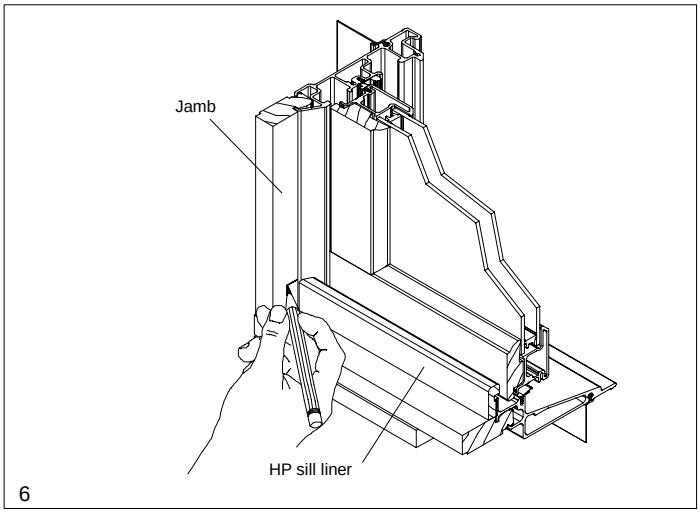

10. Apply a bead of sealant at the sill liner to the jamb joint from the sill to the mark made on the jamb and over the top of the sill liner. See illustration 7.

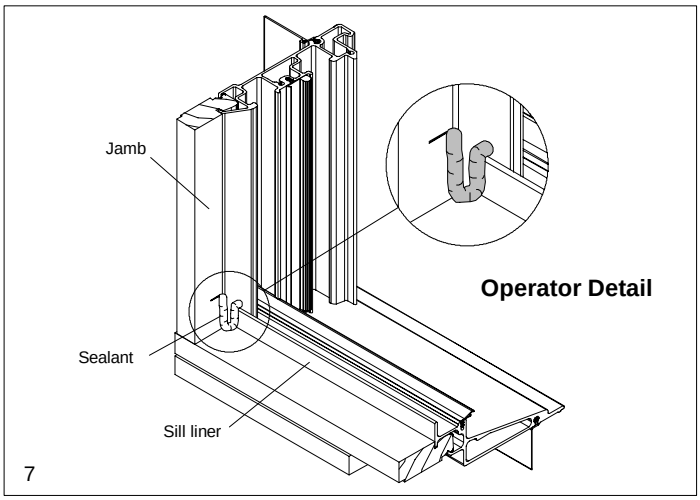

11. Remove the paper backing from the adhesive tape on the HP sill liner.

12. Apply approximately a 3/16″ (5) bead of sealant in the groove on the back of the HP sill liner. See illustration 8.

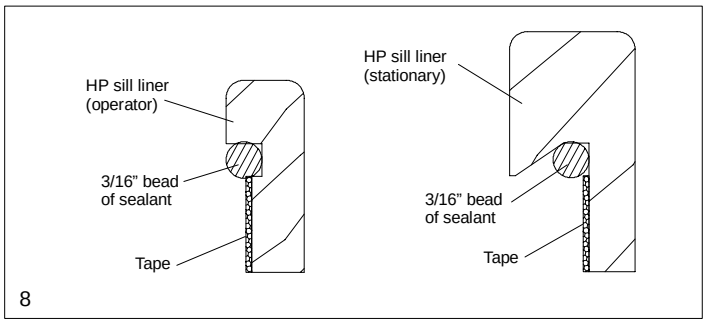

13. Set the HP sill liner in place, slightly away from Ultrex sill liner as shown in illustration 9. **Make sure the adhesive tape does not contact the Ultrex sill liner.** Rotate the HP liner over the Ultrex sill liner. Firmly press HP sill liner against Ultrex sill liner so that adhesive tape bonds the two pieces together.

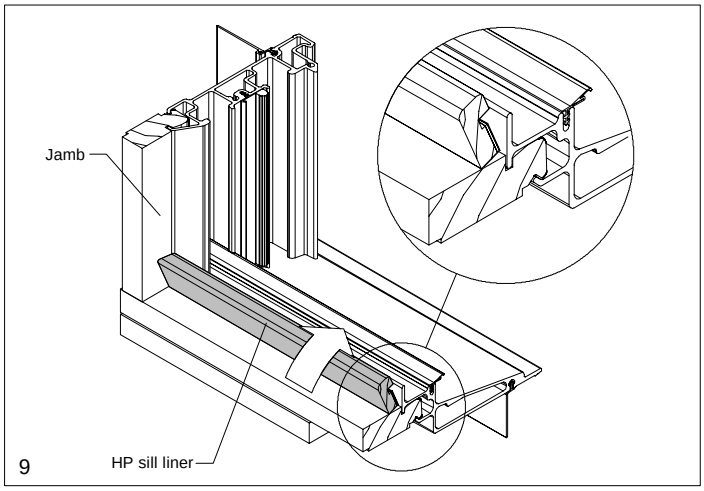

14. Follow manufacturers recommended procedures for removing excess sealant from the Ultrex/wood joint.