# Integrity Casement/Awning Impact Mullion Kit Instructions

## BEFORE YOU BEGIN

**IMPORTANT**

Read these instructions thoroughly before beginning to assemble any multiple Integrity units. Failure to assemble as recommended will void any warranty, written or implied. Refer to specific product installation instructions for proper installation methods.

**WARNING**

Practice safety! Wear safety glasses or goggles and appropriate hearing protection when assembling multiple Integrity window and door products.

*NOTE: When specifying or considering the structural load requirements for windows and doors, it is important to consider the method of fastening the unit(s) together in addition to the method of fastening multiple assemblies into an opening. The methods contained herein may not be appropriate for all performance requirements. Selection of the appropriate fastening method(s) is the sole responsibility of the installer, contractor, structural engineer, architect, building owner and/or installer.*

Multiple assemblies can be ordered factory mulled up to 4 units wide by 1 unit high, or 2 units wide by 2 units high as long as the following limitations are not exceeded:
**Maximum RO Width: 113″ (2870) not to exceed 71 5/8″ (1819) in height.**
**Maximum RO Height: 94 3/4″ (2407) not to exceed 73″ (1854) in width.**

Assemblies exceeding these limitations must be field mulled and must be assembled using a structural mullion kit designed specifically for Integrity multiple assemblies. Contact your Integrity dealer for additional information.

The construction adhesive called for in the Round Top over Casement instructions should meet AFG-01 specifications, as established by the American Plywood Association.

## Table of Contents


**Impact Mullion Kit ..... 1**
**2 Wide x 2 High Configuration ..... 3**


## Impact Mullion Kit

**Parts Shipped With Impact Mullion Kit Casement/Awning**

| Illustrations (not to scale) | Description and Color | Part/Profile Number |
|---|---|---|
| 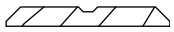 | Interior mull trim* | W1243 |
| | Mull reinforcement board* | W10978 |
| | Wood mullion tie 12" (305) | W7004 33732920 |
| 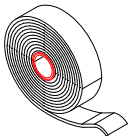 | Mull sealant foam tape - 1 sided adhesive 96" (2438) | 11869508 |
| 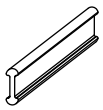 | Aluminum mulling pin* | A330 |
| 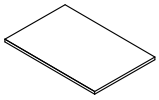 | Nailing fin connector* | 10500213 |
| | #8 x 2 1/2" screws | 11808212 |

* Length/color/number will vary depending on particular mull kit ordered.

*NOTE: Mullion kits will also include either mullion clips or mullion brackets with screws, depending on the type of installation. See Supplemental Instructions for IZ3 Rated Products for more information*

**You Will Need to Supply**

| | |
|---|---|
| Safety glasses | Hearing protection |
| Phillips screwdriver | Hammer |
| Power drill | 3/16" and 7/64" drill bit |
| Clamps | Hacksaw |
| Silicone sealant w/gun | 3/4" brad nails w/gun |

1/2" crown x 1/2" leg 16 gauge staples w/gun
3/16" crown x 1" leg 18 gauge staples w/gun

**IMPORTANT**

The mull reinforcement board is made of laminated veneer lumber; it cannot be replaced with non-LVL material.

## Mulling Procedure - Standard

1. Lay frames on a flat surface in the desired mulling configuration (interior facing up). Remove nailing fin and/or drip cap from head jamb, sill, and side jambs that will be mulled together. Apply mull sealant foam tape the entire length of the one jamb to be mulled ensuring that it is located 1/4″ (6) from the exterior edge of the Ultrex® frame as shown in figure 1.

***NOTE: When assembling units vertically it will be necessary to remove standing block from underside of sill (upper unit only).***

**IMPORTANT**

Units should be flush and square with each other.

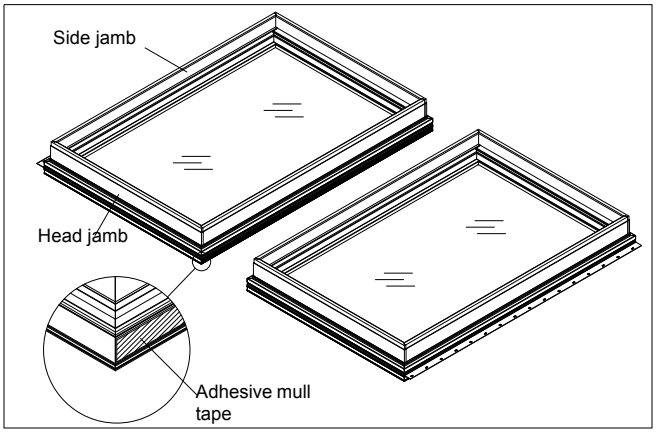


**Figure 1**

2. Slide aluminum mulling pin into nailing fin/drip cap kerf. The mull pin ends must be recessed 1/4″ (6) to allow sealant application later. See figure 2.

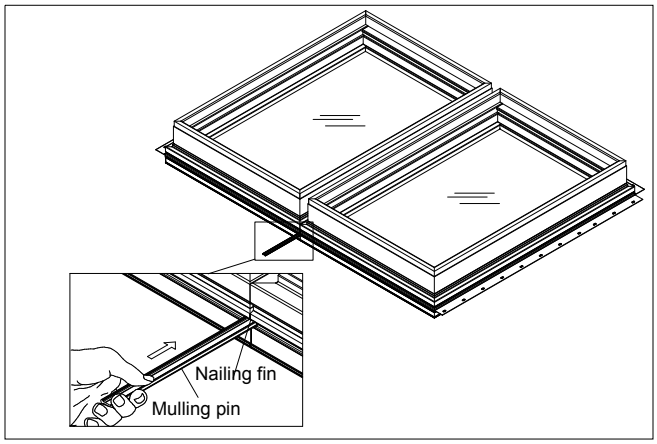


**Figure 2**

*NOTE: If mulling a polygon to a casement unit drill out the outer edges of the nailing fin/drip cap kerf of the polygon unit on one end with a 3/16" drill bit, clean filings out of kerf. This will help facilitate installation of the mulling pin. A hammer may aid in the application of the mull pin.*

3. Insert mullion reinforcement board between frames and fasten to interior wood frame members with 1/2″ x 1/2″ 16 gauge staples spaced every 4″ (102). See figure 3.

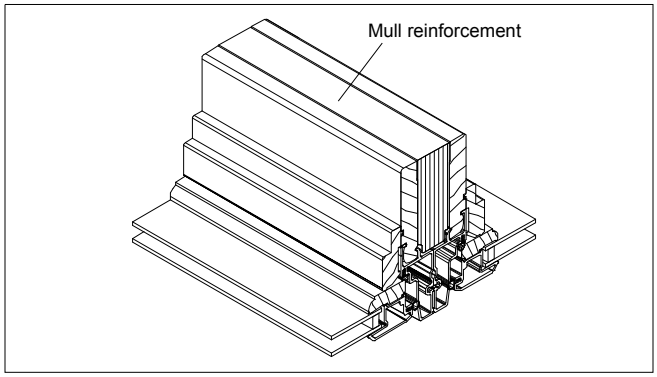


**Figure 3**

4. Attach mullion tie block at sill with at least four 3/16″ x 1″ 18 gauge staples on each side of mullion as shown in figure 4.

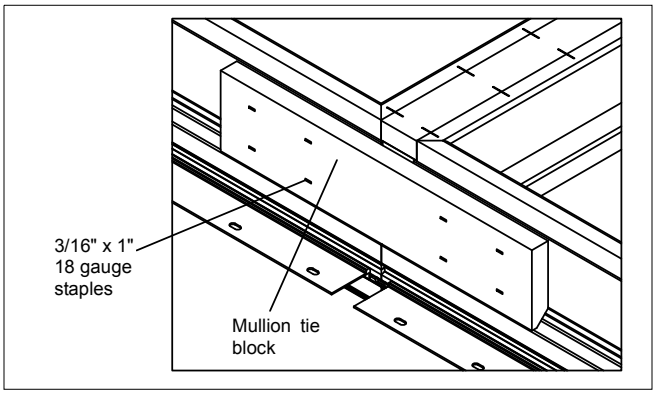


**Figure 4**

5. Apply silicone sealant at the mullion from the frame exterior edge to the drip cap/nailing fin kerf and across the kerf over the mulling pin as shown in figure 5. Apply nailing fin connectors at the head jamb and sill or jambs by removing the paper backing from the connector and pressing into place. See figure 5. If applicable jamb extension can now be applied. Follow installation instructions for installing unit into rough or masonry opening. Interior mull trim should only be applied after unit is completely installed and interior trim is applied.

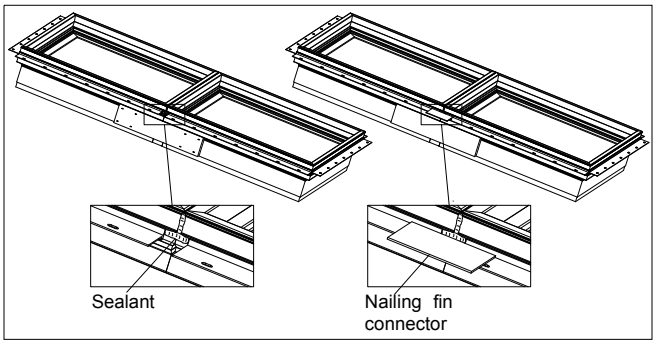


**Figure 5**

# 2 Wide x 2 High Configuration

**IMPORTANT**

Mull reinforcement member should be added horizontally in all 2 wide x 2 high configurations. Upper and lower 2 wide assemblies are mulled prior to installing horizontal mulling pin and reinforcement member.

*NOTE: Illustrations for mulling the upper units of a 2 wide x 2 high assembly show direct glaze polygons. Procedures are the same for all configurations.*

## Mulling Procedures - Upper 2 Wide Assembly

1. Lay the two direct glaze polygons, in-sash transoms, casements or awnings that will be mulled above the lower assembly units in the desired mulling configuration (interior facing up). Remove nailing fin from sill and side jambs that will be mulled together. If mulling polygons above lower assembly drill out the outer edges of the sill nailing fin/drip cap kerfs on each corner and head jamb at mullion with a 3/16″ drill bit. See figure 6. Clean filings out of kerf. This will help facilitate installation of the mulling pin. Apply mull sealing tape the full length of the jamb ensuring that it is located 1/4″ (6) from the exterior edge of the Ultrex frame as shown in figure 6.

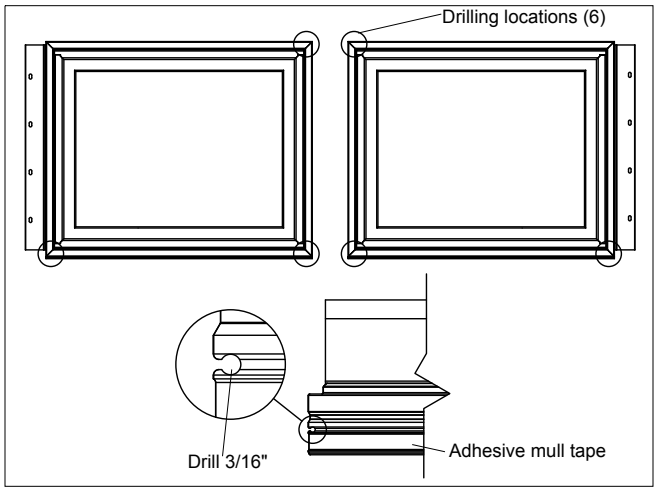


**Figure 6**

**IMPORTANT**

Units should be flush and square with each other.

2. Slide aluminum mulling pin into nailing fin drip cap kerf. Make sure mulling pin is recessed at least 1/4″ (6) on each end to allow for sealant placement and horizontal mulling pin application later. See figure 7.

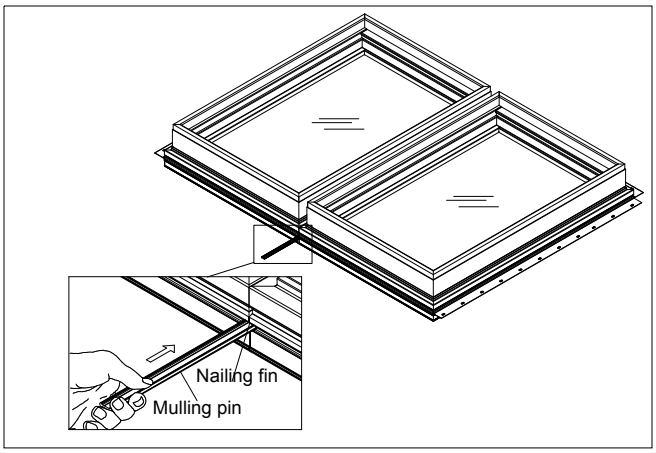


**Figure 7**

3. Insert mullion reinforcement board between frames and fasten to interior wood frame member with 1/2″ x 1/2″ 16 gauge staples spaced every 4″ (102). See figure 8.

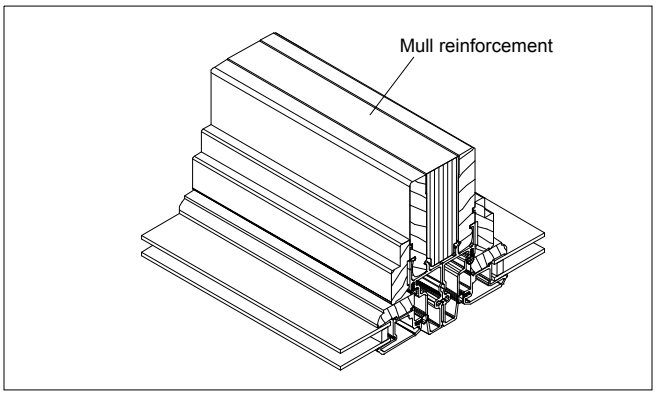


**Figure 8**

## Mulling Procedures - Lower 2 Wide Assembly

*NOTE: Illustrations for mulling the lower units of a 2 wide x 2 high assembly show in-sash stationary units. Procedures are the same for all configurations.*

4. Lay the lower assembly on a flat surface in the desired mulling configuration (interior facing up). Remove nailing fin and drip cap from head jambs and side jambs that will be mulled together. Apply mull sealing tape the full length of the jamb ensuring that it is located 1/4″ (6) from the exterior edge of the Ultrex frame as shown in figure 9.

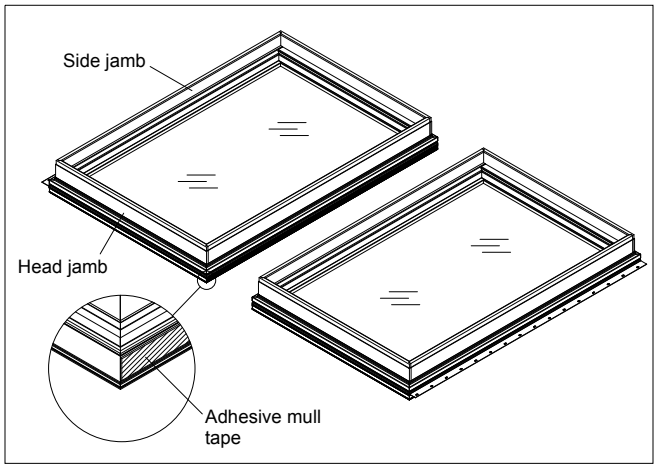


**Figure 9**

*NOTE: If mulling direct glaze polygons, drill out the outer edges of the head jamb nailing fin/drip cap kerfs at all corners.*

5. Slide aluminum mulling pin into nailing fin/drip cap kerf. Make sure mulling pin is recessed at least 1/4″ (6) on each end to allow for sealant placement and horizontal mulling pin application later. See figure 10.

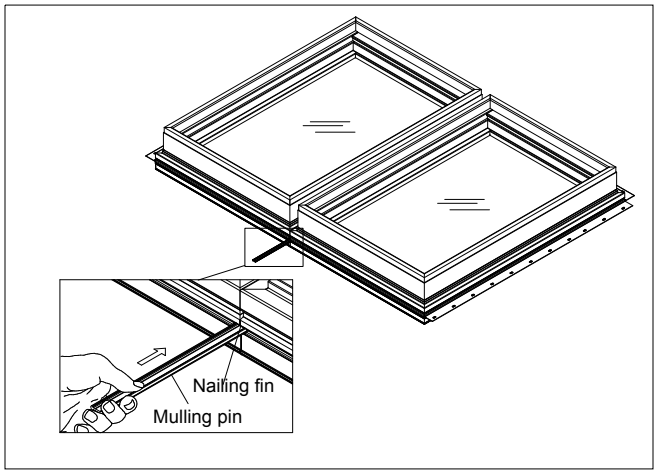


**Figure 10**

6. Insert mullion reinforcement board between frames and fasten to interior wood frame members with 1/2″ x 1/2″ 16 gauge staples spaced every 4″ (102). See figure 11.

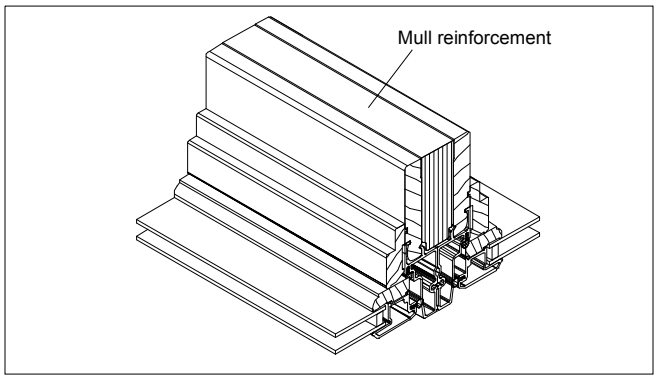


**Figure 11**

7. Attach mullion tie block at sill with at least four 3/16″ x 1″ 18 gauge staples on each side as shown in figure 12.

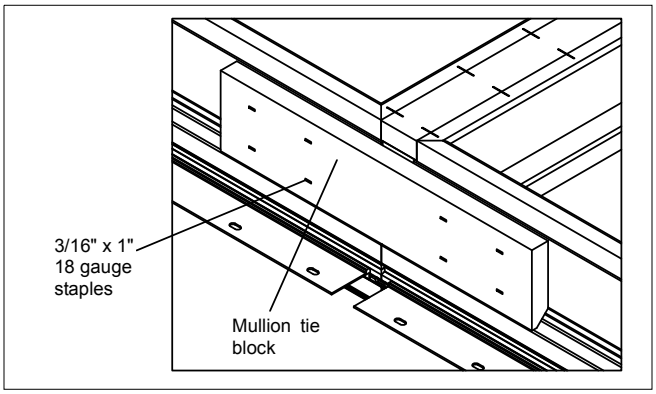


**Figure 12**

## Mulling Procedures - 2 Wide 2 High Unit Assembly

*NOTE: Illustrations for mulling the 2 wide x 2 high assembly show awnings over operating casement units. Procedures are the same for all configurations.*

8. Apply mull sealing tape the full length of the head jamb of the lower 2 wide casement assembly ensuring that it is located 1/4″ (6) from the exterior edge of the Ultrex frame similar to figure 1.

9. Set upper and lower mulled units in the desired configuration (interior facing up). Clamp units together on interior near each end of the mullion (use scrap blocks to protect interior wood frame members). Slide horizontal aluminum mulling pin into nailing fin kerf. Make sure mulling pin is recessed at 1/4″ on each end to allow for sealant application later. Insert remaining mull reinforcement boards between upper and lower assemblies. Fasten interior wood frame members with 1/2″ x 1/2″ 16 gauge staples spaced every 4″ (102). See figure 13.

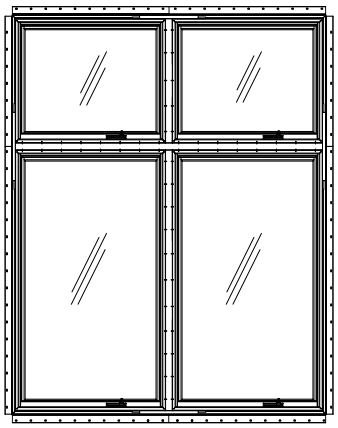

**Figure 13**

10. Apply silicone sealant at the mullion from the frame exterior edge to the drip cap/nailing fin kerf and across the kerf over the mulling pin as shown in figure 14. Apply nailing fin connector at the head jamb, sill, and jambs by removing the paper backing from the connector and pressing into place. See figure 14. If applicable, jamb extension can now be applied. Follow installation instructions for installing unit into rough or masonry opening. Interior mull trim should only be applied after unit is completely installed and interior trim is applied.

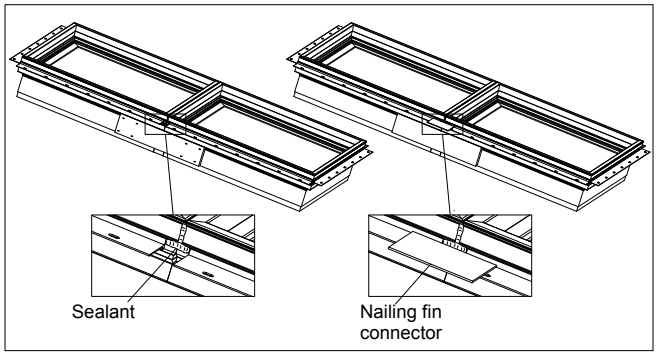


**Figure 14**

*NOTE: For 2 High or 2 Wide and 2 High units the following additional step must be performed.*

11. Carefully pry away the head jamb stop of lower unit(s) with stiff bladed putty knife. Remove any brad nails.

12. Pre-drill holes using 7/16" drill bit. Holes are spaced a maximum 8" (203) from each side jamb (a maximum of 14" (356) apart). Screws should be evenly spaced.

13. Fasten #8 x 2 1/2" header screws through pre-drilled holes into sill of upper unit.

14. Reinstall head jamb stop and fasten with 3/4" brad nails evenly spaced.

*NOTE: It is important that care be exercised when moving a mulled assembly from the mulling area to the rough opening.*