Integrity Casement Bow/Bay

Assembly and Mulling Instructions

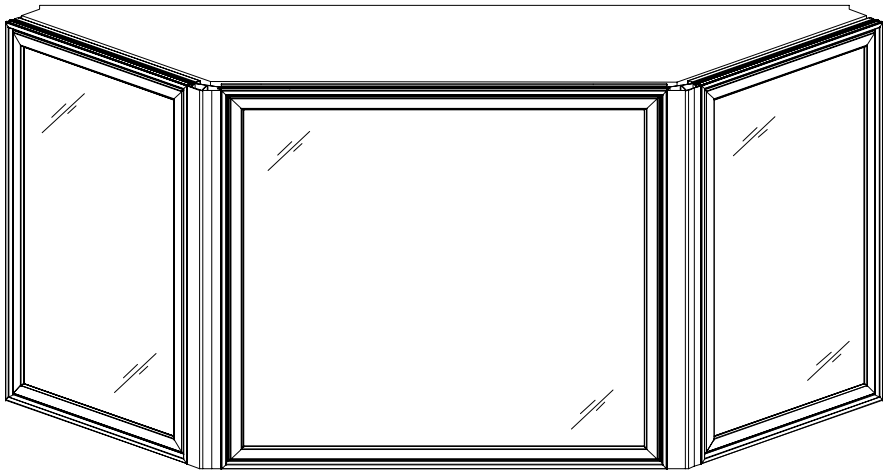

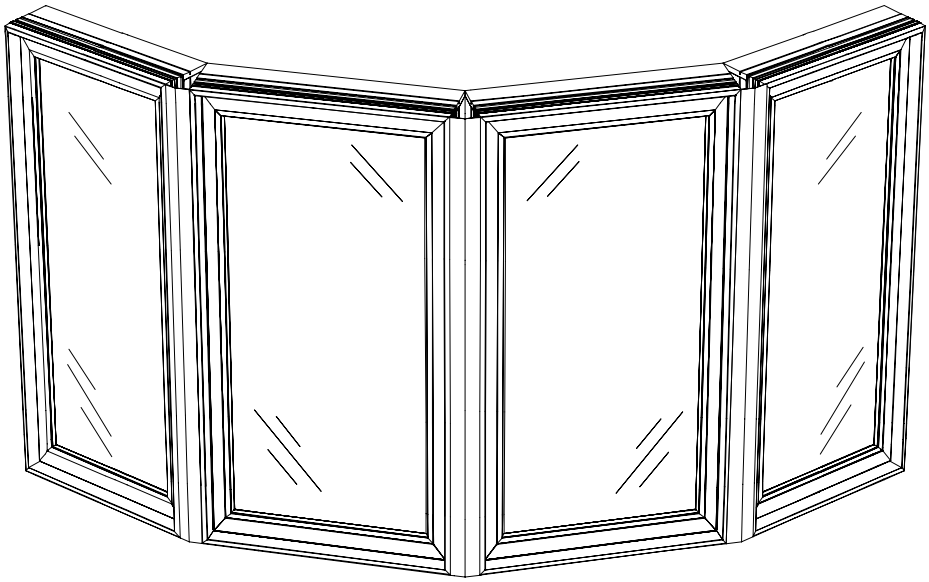

12/16/04
11708512

Integrity from MARVIN
Windows and Doors

BEFORE YOU BEGIN

IMPORTANT: Read these instructions thoroughly before beginning to mull your Integrity Casement Bow/Bay unit. Failure to assemble and mull as recommended will void any warranty, written or implied. Regional applications and standards may vary, therefore Marvin is not responsible for interpretations of local codes and/or ordinances. Installation of Integrity products is the sole responsibility of the installer, contractor, structural engineer, architect, building owner and/or consumer. For additional information, consult your local Integrity dealer.

NOTE: When specifying or considering the structural load requirements for windows and doors, it is important to consider the method of fastening the unit(s) into the opening. Selection of the appropriate fastening method is the sole responsibility of the installer, contractor, structural engineer, architect, building owner and/or consumer.

IMPORTANT: Do not allow strong detergents, ammonia, solvents, chemicals or other harsh cleaning substances to come in contact with Ultrex surfaces as they can cause damage. If you wish to maintain the finish gloss of the Ultrex exterior, wash with soap and water and apply a coat of non-abrasive automotive wax.

CAUTION: It is absolutely imperative that a support platform be constructed below your Integrity Casement Bow/Bay unit. Additionally, the main support must be located directly under the sill of the Bow/Bay.

WARNING: Practice safety! Wear safety glasses or goggles and appropriate hearing protection when installing or performing adjustments to an Integrity window or door product.

PARTS SUPPLIED WITH MULL KIT

(Contents may vary by kit specifications)

Illustrations (not to scale)	Description and Color	Part/Profile Number
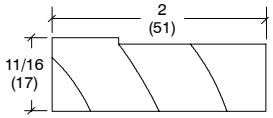	Jamb Filler	W7006
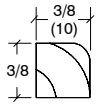	Horizontal Interior Trim	W7002
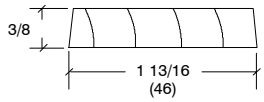	Bow Vertical Interior Trim	W1189
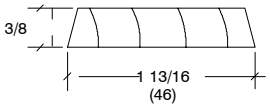	30° Bay Vertical Interior Trim	W1175
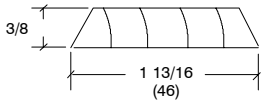	45° Bay Vertical Interior Trim	W1187
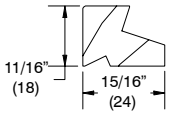	4 9/16″ Bow Jamb Extension – 4W	W7311
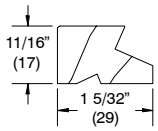	4 9/16″ Bow Jamb Extension – 5W	W2138
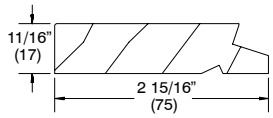	6 9/16″ Bow Jamb Extension – 4W	W7304
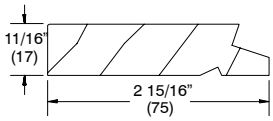	6 9/16″ Bow Jamb Extension – 5W	W2141
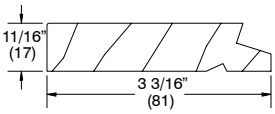	6 13/16″ Bow Jamb Extension – 4W	W2211

PARTS SUPPLIED WITH MULL KIT

Illustrations (not to scale)	Description and Color	Part/Profile Number
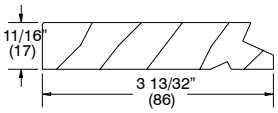	6 13/16″ Bow Jamb Extension – 5W	W2209
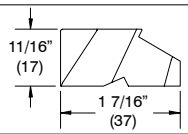	30° Bay 4 9/16″ Jamb Extension	W7323
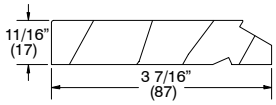	30° Bay 6 9/16″ Jamb Extension	W7324
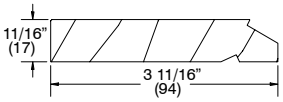	30° Bay 6 13/16″ Jamb Extension	W2207
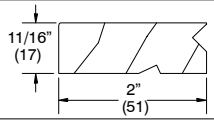	45° Bay 4 9/16″ Jamb Extension	W8575
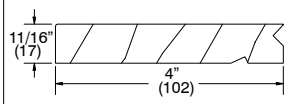	45° Bay 6 9/16″ Jamb Extension	W8574
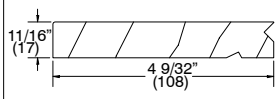	45° Bay 6 13/16″ Jamb Extension	W2208
	Bow Mull Connector Block	A166
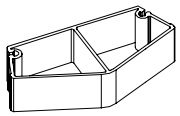	30° Bay Mull Connector Block 45° Bay Mull Connector Block	A168 A167
	Mulling Pin	A330

PARTS SUPPLIED WITH MULL KIT

Illustrations (not to scale)	Description and Color	Part/Profile Number
	Drip Cap / Nailing Fin	V119
	Sill / Side Jamb Nailing Fin	V112
	Nailing Fin Corner Gasket	11869513 (Package of 4)
	12° Mull Foam Plug (Bow) 30° Mull Foam Plug 45° Mull Foam Plug	10500105 10500108 10500106
	Bow and Bay Installation Instructions	19970617

NOTE: Numbers listed in parentheses ( ) are metric equivalents in millimeters rounded to the nearest whole number.

ATTENTION: Specifications and technical data are subject to change without notice.

ICA 4W Bow (equal sized units)

Unit Call number width (first 2 digits of call #)	Actual Outside Jamb Extension Dimension
17	61 3/4″ (1568)
21	77 5/16″ (1964)
25	92 7/8″ (2359)
29	108 7/16″ (2754)

ICA 5W Bow (equal sized units)

Unit Call number width (first 2 digits of call #)	Actual Outside Jamb Extension Dimension
17	76 7/64″ (1933)
21	95 1/4″ (2419)
25	114 3/8″ (2905)

TO CALCULATE OUTSIDE WIDTH OF JAMB EXTENSIONS FOR A BAY UNIT

1. Locate the appropriate measurement conversion on the chart for your mull kit (30 or 45 degree); listed by FLANKER unit **CALL NUMBER WIDTH (first two digits of the call number)**.
2. Add CENTER unit **CALL NUMBER WIDTH (first two digits of the call number)** to flanker measurement conversion (found in step 1) to obtain jamb extension overall outside width in inches.

ICA 45° Bay		ICA 30° Bay	
Flanker Call Number Width	Outside Jamb Extension Conversion	Flanker Call Number Width	Outside Jamb Extension Conversion
17	21 5/8″ (549)	17	26 23/32″ (679)
21	27 9/32″ (693)	21	33 5/8″ (854)
25	32 15/16″ (837)	25	40 9/16″ (1030)
29	38 19/32″ (980)	29	47 1/2″ (1207)
33	44 1/4″ (1124)	33	54 7/16″ (1383)
37	49 29/32″ (1268)	37	61 3/8″ (1559)
49	66 7/8″ (1699)	49	82 1/8″ (2086)
57	78 3/16″ (1986)	57	96″ (2438)
73	100 13/16″ (2561)	73	123 11/16″ (3142)

YOU WILL NEED TO SUPPLY

Safety glasses
Tape measure
Pencil or fine line marker
1/8″ punch or small nailset
Industrial scissors or aviation shears
3/16″ x 1″ 18 gauge staples w/gun
1/2″ x 1 1/2″ 16 gauge staples w/gun
15/16″ x 1″ 16 gauge staples w/gun
2d (1″) finish nails
4d (1 1/2″) finish nails
#8 x 1 1/4″ flathead wood screws w/finishing washers
Power miter saw w/metal blade (or equivalent)
Wood saw (hand or power circular)
APA rated AFG-01 spec. (or equivalent) caulk/adhesive w/gun
Fiberglass Insulation
Grade NS Class 25 silicone sealant per ASTM C920. *Sealant must be compatible with building exterior and window/door surfaces.*
Hearing protection
Hammer
3′ - 4′ ruler/straight edge

REPLACEMENT PARTS

See Integrity Parts and Service Manual for replacement parts or contact your Integrity representative.

INDEX

	Page
Mulling Preparation	2
Mulling Procedures	2
Head/Seatboard Application	3
Final Mulling Procedures	4
Interior Mull Trim Application	5

MULLING PREPARATION

1. Remove plastic and cardboard shipping wrap from units to be mulled, carefully inspect for hidden damage. Remove nailing fin from each unit, discard. Check all sash locks to be sure they are locked and lay units “INTERIOR SIDE UP” on a smooth level surface.
2. Measure (longest portion of wood jamb), cut, and apply jamb filler to full length of each side jamb except jambs that will be on the outside of the assembled unit. (Jambs that will receive return jamb extension.) Align filler flush with interior face of side jamb. Fasten filler to each jamb with a double row of 1″ staples or nails spaced 4″ (102) to 6″ (152) apart. Repeat for each unit. See illustration 1.

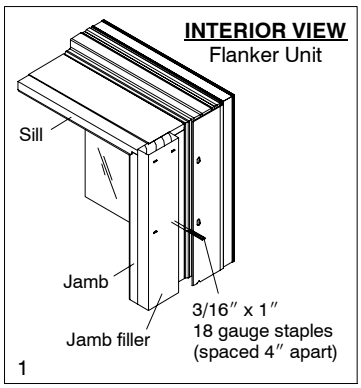

CAUTION: Always use adequate hearing protection when operating power saws or staplers/nailers.

3. Stand units on a smooth level surface on sills in configuration desired. **BE SURE TO CHECK CONFIGURATION SET UP TO ENSURE PROPER MULLING ORDER.**

4. Measure length of overall Ultrex® frame height. Cut mull connector blocks to length (if needed) using a power miter saw with non-ferrous metal cutting blade (or equivalent). Subtract 1″ (25) from frame height and cut the mull connector pins to length, if needed.

MULLING PROCEDURES

5. Remove backing from mulling tape on each side of the connector blocks. Position a mull connector block flush with exterior face of side jamb to be mulled. Align accessory kerfs and carefully tap mulling pins into kerfs using a hammer and wood block. Repeat at each mullion. Countersink mulling pins 1/2″ (13) using a 1/8″ punch or small nailset. See illustration 2.

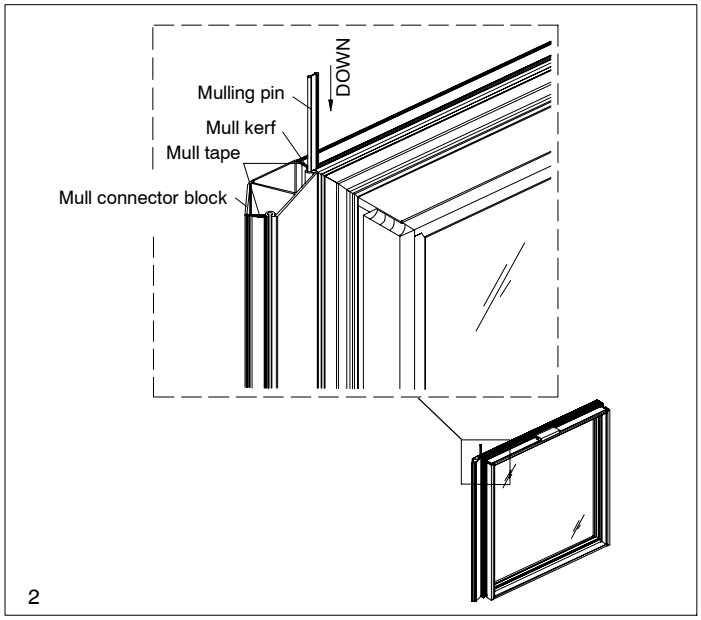

2

6. Measure (longest portion of wood jamb), cut, and apply jamb extensions on the outer side jamb of each end unit, align jamb extension with outer edge of jamb filler. Attach jamb extension using 3/16″ x 1″18 gauge staples spaced 8″ (203) apart. See illustration 3.

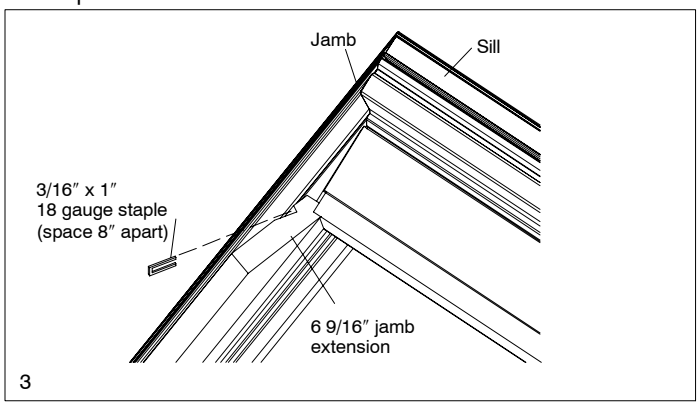

3

7. **Refer to appropriate dimension table on page 4 for proper assembly width at jamb extension (measured from outside of jamb extension).** Check measurement at top and bottom of mulled assembly, it must be equal. Diagonal measurements of interior must also be equal to ensure unit is square. See illustration 4.

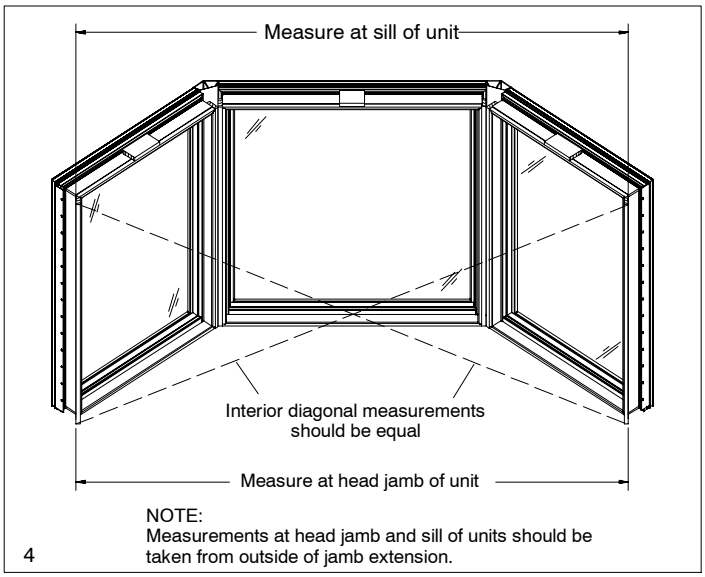

4

HEAD/SEATBOARD APPLICATION

8. Place a headboard blank on top of mulled assembly and align interior edge flush with jamb extension. Trace along exterior face of Ultrex® frames, flanker unit outer side jambs, and jamb extension on the board.
   Lay headboard on a flat surface with tracing lines up. To form a final cutting line, measure 2 3/4″ (70) in from lines drawn when tracing Ultrex frame exterior. Layout cutting lines along setback measurements on the headboard to intersect with side jamb lines (side jamb/jamb extension lines are cut as traced). Cut out headboard and use as a template to cut out seatboard. See illustration 5.

NOTE: When tracing headboard on seatboard blank make sure the finished side will be facing interior of unit.

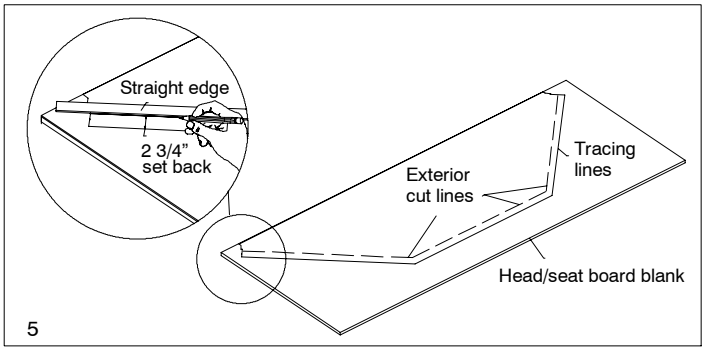

5

9. Put a small amount of silicone sealer inside mull connector cavities where foam plugs are to be positioned to hold plugs in place. Insert foam plugs in mull connector blocks flush with top edge. See illustration 6.

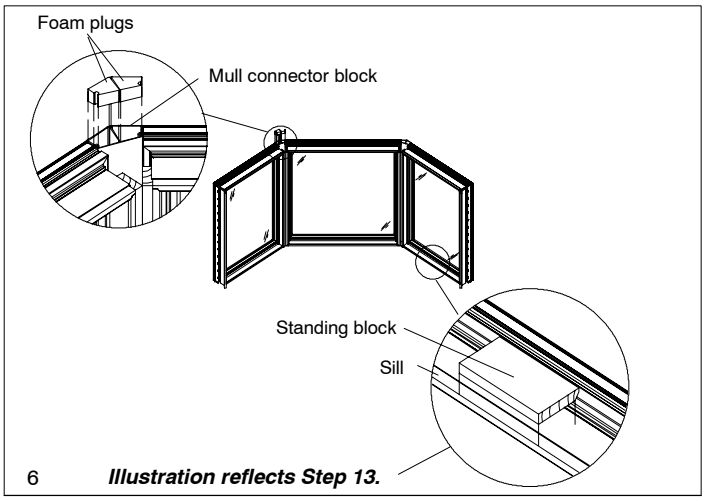

6 ***Illustration reflects Step 13.***

10. Position headboard on unit and attach one side at jamb extension and outer side jamb using four to six 1/2″ x 1 ″ 16 gauge staples. Recheck jamb extension and diagonal measurements to be sure they are correct (see step 7). Attach other side of headboard to jamb filler and jamb extension. Trace a screw line on headboard 5″ (127) in from **exterior edge of frames.** Check interior mullions ensure the faces of the jamb fillers align and move mullions in/out to equalize gaps (if any) between units. Attach headboard using #8 x 1 1/4″ flathead screws spaced 6″ (152) to 8″ (203) apart. Make sure screw heads are flush with head/seat board. See illustration 7.

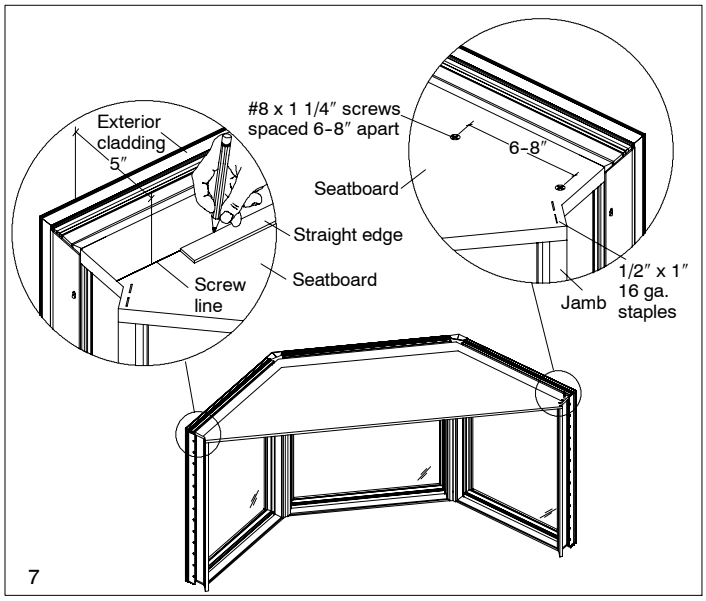

11. Turn mulled assembly over to expose sills.

12. Fill mullion cavities loosely with fiberglass insulation (do not over pack). Apply a small amount of silicone sealer inside mull connector cavities where foam plugs are to be positioned to hold plugs in place. Insert mull connector foam plugs in top of mull connector blocks. Repeat at each mullion.

IMPORTANT: Do not use expanding foam type insulation in this application.

13. Remove sill standing blocks from all units. See illustration 6. Repeat step 10 to apply seatboard. Measure and cut nailing fin for sills of each unit, set aside for later use. Turn mulled assembly over to expose head jambs.

FINAL MULLING PROCEDURES

14. A continuous nailing fin/drip cap must be cut out at mulls in order to follow head jambs of the unit. At edge of an end unit head jamb, position in place a lineal piece of nailing fin/drip cap long enough to span the entire unit. Mark the center point of adjacent mull connector block on beige surface of drip cap. Hold at this mark and pivot into place on head jamb of adjacent unit. Repeat marking procedure at each mull.

15. Place the marked nailing fin/drip cap on a flat surface. A short section of mull connector block is used as a template to mark the cutting angles so a notch can be removed from the drip cap, this will allow the drip cap to bend around the mulls while leaving the clear vinyl (visible edge) continuous and intact. See illustration 8.

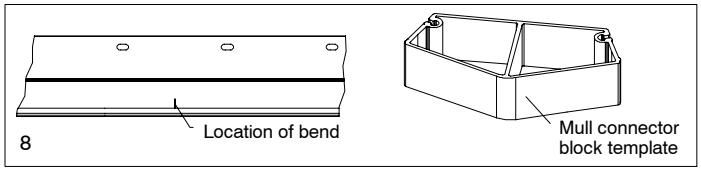

16. **If you are cutting drip cap/nailing fin for a bow skip to Step 19.** Place the center member of template on the drip cap at mark. While keeping the mark and template aligned, hold one side of the template along the clear vinyl edge and scribe angle the template forms on beige portion of the drip cap. See illustration 9. Next pivot the opposite side of template along clear vinyl edge of drip cap and scribe angle. From the point at which each angled mark meets the nailing fin portion scribe lines straight across the nailing fin (this line should be perpendicular to the edge of the drip cap). See illustration 10.

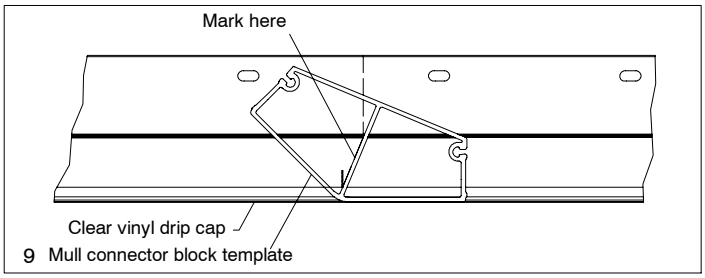

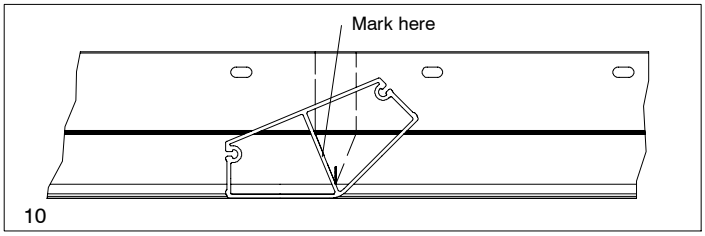

17. The two lines scribed on the drip cap should make a "V" notch, with the tip of the "V" starting where the clear and beige vinyl meet and the center mark from step 14. Repeat step 16 at other mullion center marks.

18. Cut out areas marked with an industrial scissors or aviation shears. **DO NOT CUT THROUGH CLEAR VINYL SECTION OF DRIP CAP**, except when trimming off ends at flanker units. See illustration 11. **Skip Step 19.**

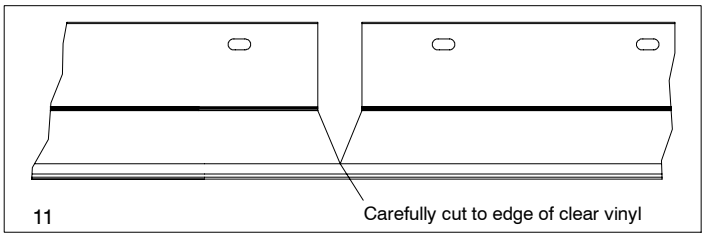

19. For bow units, scribe line straight across drip cap/nailing fin at a mullion center mark. Cut along this line with an industrial scissors or aviation shears up to clear portion of drip cap. **DO NOT CUT THROUGH CLEAR VINYL SECTION OF DRIP CAP.** Cut an additional 1/4″ off nailing fin portion on each side of center cut. Repeat at each mullion. See illustration 12.

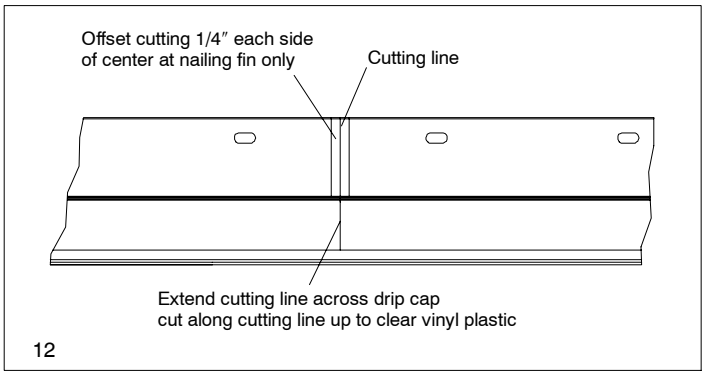

20. The bottom connecting barb of nailing fin/drip cap must be cut away at each mullion block approximately 2 1/2″ (64) (Bay units) or 1″ (25) (Bow units) on each side of notch removed. See illustration 13.

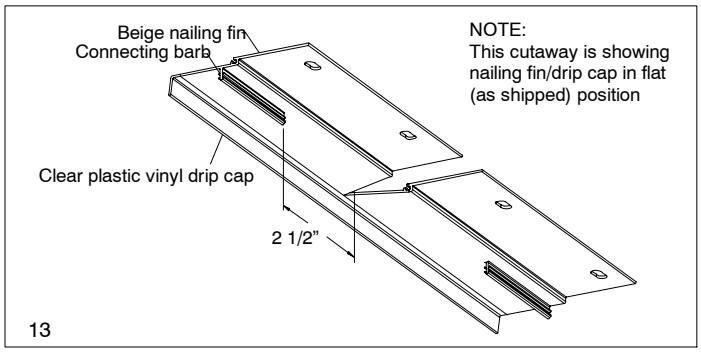

13

21. Prior to attaching drip cap on a bay unit, place a bead of silicone on center member of the mull connector blocks, this will help seal the drip cap. (Bay units only).

22. Apply nailing fin/drip cap to head jambs of unit. Seal drip cap at mullion cuts with a small bead of silicone. Cut excess nailing fin/drip cap at ends flush with side jambs. Apply jamb nailing fin to sides of unit, fold against jamb for shipping (if needed). Temporarily fasten sill nailing fin previously cut in step 11 to top of headboard using tape or 1/2″ fasteners (do not fasten if unit is to be installed at mulling site).

23. Fasten interior mulled side jambs with 15/16″ x 1″ 16 gauge staples place a head of sealant over the center rib of mull connector spaced 4″ (102) to 6″ (152) apart. See illustration 14.

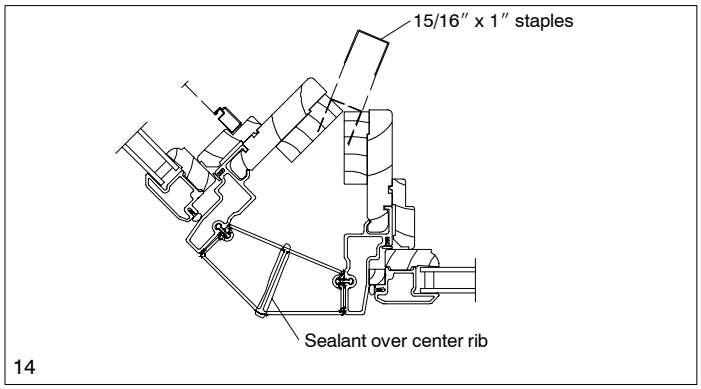

14

INTERIOR TRIM APPLICATION

24. If **both** a headboard and seatboard were installed, apply interior vertical and horizontal mull trim (if not, apply mull trim after unit is installed and interior casing has been applied). Cut interior vertical mull trim the same length as jamb filler. Center trim at mullion so reveals are the same on each side. Apply trim using 1″ to 1 1/2″ finish nails spaced 6″ (152) to 8″ (203) apart, set with nailset.

25. Apply horizontal trim where head/seatboard and unit frame meet. Measure between jamb and/or vertical mull trim. Cut to length and bevel ends to mate with vertical mull trim as required. Fasten trim using 1″ to 1 1/2″ finish nails spaced 6″ (152) to 8″ (203) apart, set with nailset. Repeat on each unit. See illustration 15.

NOTE: If the unit is not to be installed/finished immediately it is recommended that cardboard or heavy paper are applied to interior surfaces of head/seat board(s) to minimize handling or construction damage. Use minimum tape contact with interior wood surface to avoid adhesive contamination.

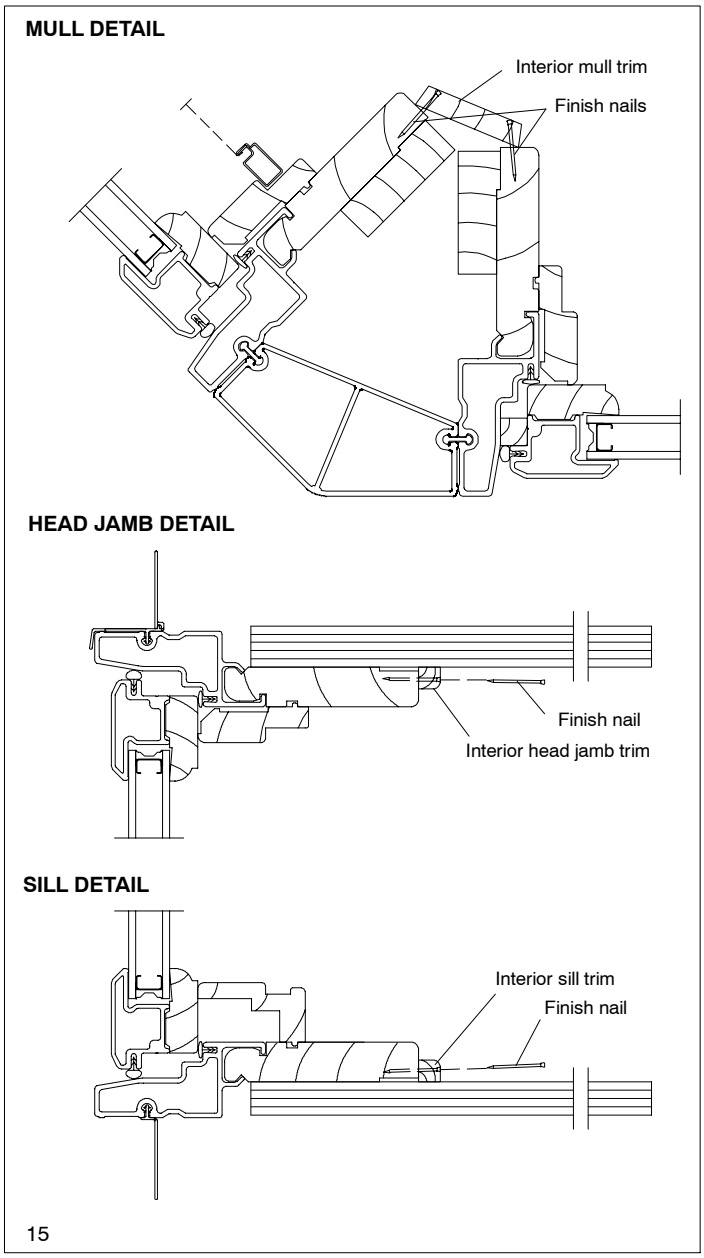

15