Clad CM/UCA Mulling Instructions

* Casemaster
* Ultimate Casement
* Ultimate Replacement Casement

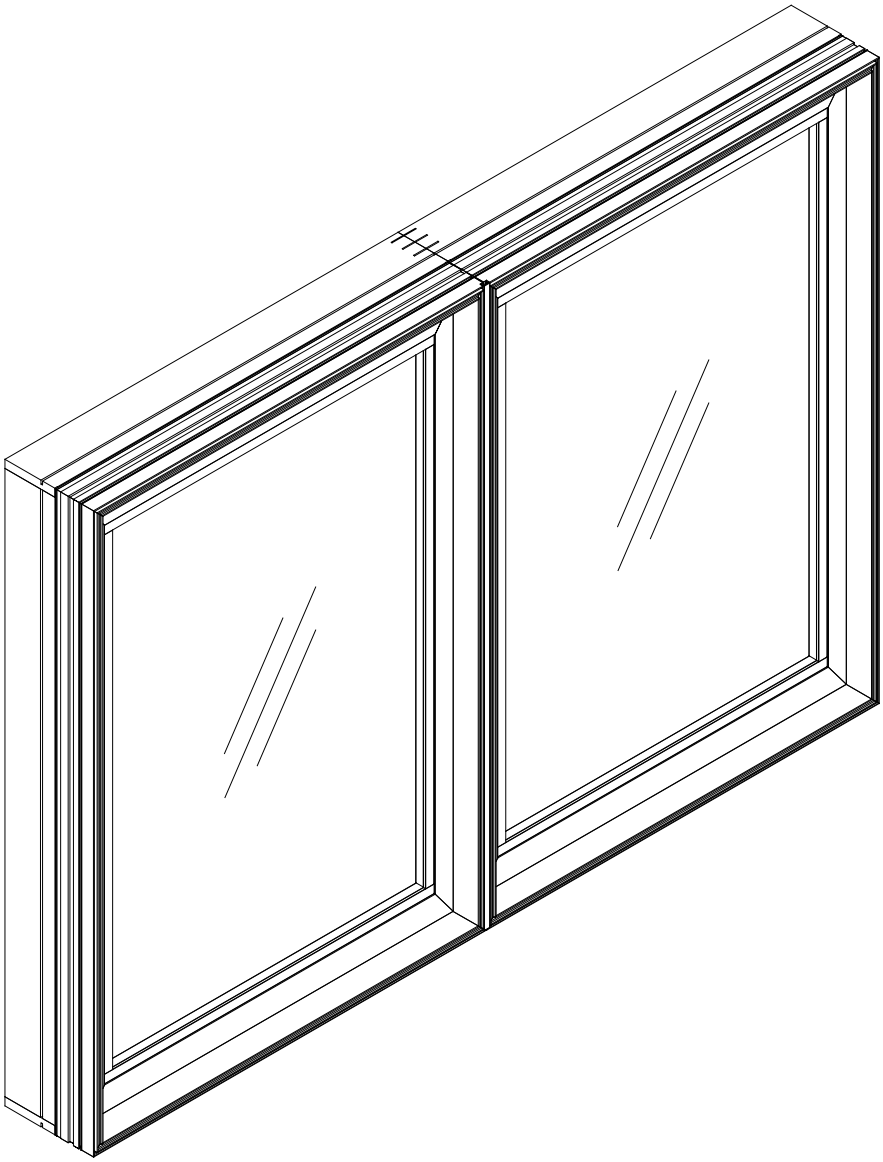

MARVIN®
Windows and Doors

Built around you.®

19972125
2011-05-09

INDEX

	Page
Vertical/Horizontal Mulling	**1**
Multiple High/Wide Units	**2**
Round Top Field Mulling Procedures	**3**
Space Mulls	**5**
3/8″ Structural Mull Reinforcement	**8**

NOTE: These instructions use Clad Casemaster for illustrative purposes.

VERTICAL/HORIZONTAL MULLING

NOTE: Vertical and horizontal mulling procedures are identical. Illustrations below show vertical mullions.

STANDARD PARTS SHIPPED

ILLUSTRATIONS (not to scale)	DESCRIPTION AND COLOR	PART/PROFILE NUMBER
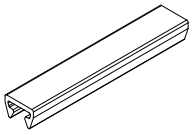	Aluminum mull clip	A104
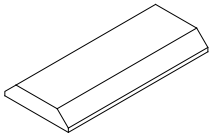	Mull trim	W1241
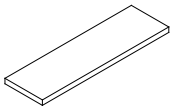	Mull seal tape 8′ (2438) 100′ (30 meters)	 11869508 11406224

YOU WILL NEED TO SUPPLY

Safety glasses	Plastic headed hammer
Hack saw or chisel	Clamps
Hammer	Staple gun
5/8″ x 1/2″ staples	1 1/4″ 16 gauge staples

Vertical/Horizontal Mull Procedures

1. If possible, remove operating sash from frames and set aside. See installation instructions provided with units for sash removal and installation.
2. Place units on a flat sturdy surface in desired mulling configuration exterior side up. If already applied, remove nailing fin and drip cap where units will be mulled.
3. Apply mull sealant tape to one unit ensuring that it is located flush with exterior edge of cladding as shown in illustration 1. Mull tape should extend past mull and wrap around corner by at least 1/8″ (3). Remove paper backing.

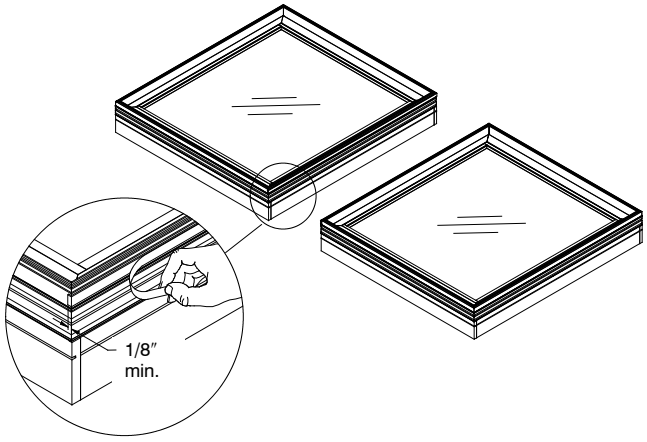

1

4. It will be necessary to notch the accessory kerf corners at mullion to apply the mull clip. Using a hammer and chisel or hack saw remove enough material on both sides to allow the mull clip to pass (approximately 7/32″ (6) on each side). See illustration 2.

*NOTE: Do not notch accessory kerfs at sill on **vertical** mullions. This may allow mull clip to slide out after installation. On **horizontal** mullions, it is only necessary to notch kerfs on one jamb.*

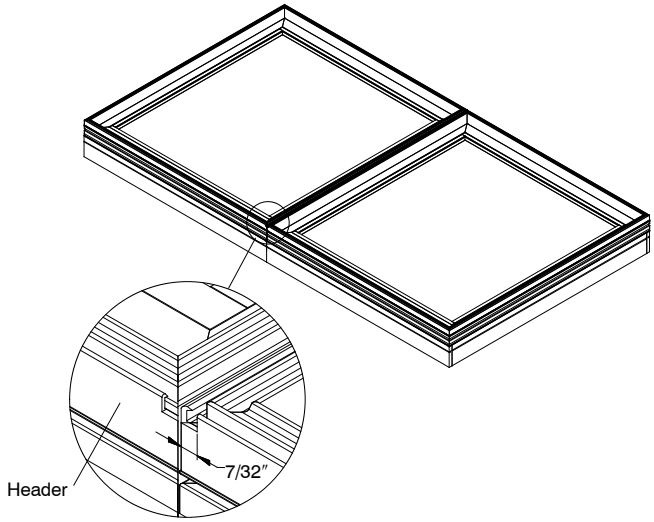

2

5. Slide aluminum mull clip over mullion as shown in illustration 3. Pound clip with a plastic headed hammer or wood block and framing hammer until it comes in contact with cladding on the opposite side. **Be careful not to kink or bend mull clip while installing**. Cut mull clip flush with cladding using a hacksaw.

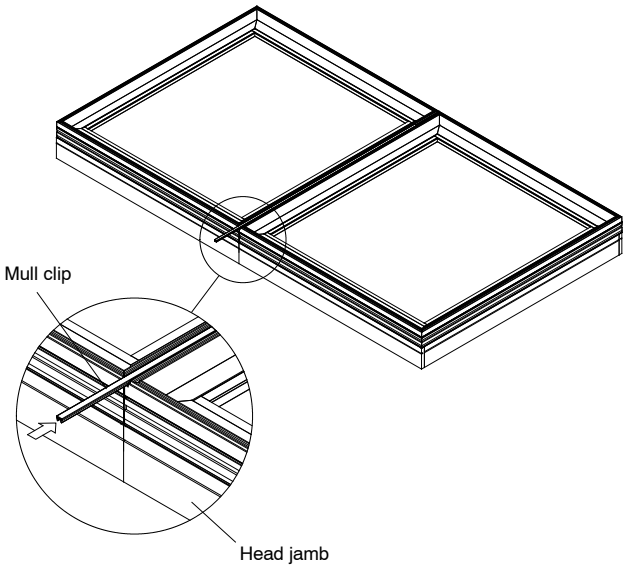

3

6. Carefully turn assembly over. Lightly clamp units together on wood frame members ensuring that they are flush on the interior and even at the mullion.
7. Fasten units together with 5/8″ x 1/2″ staples as shown in illustration 4. Three staples spaced at 2” (51) intervals must be placed on both ends starting approximately 2″ from edge of frame. Space the remaining staples at 5–8″(127–203) intervals.

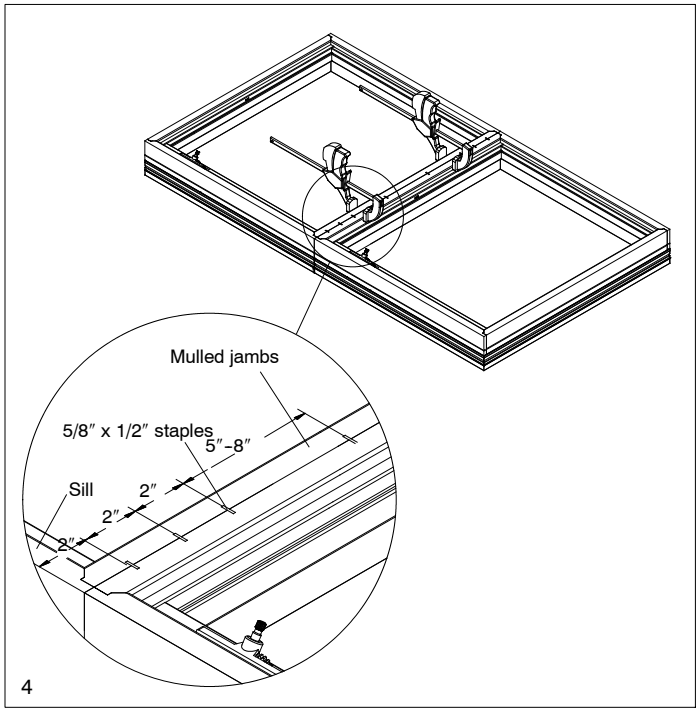

8. Fasten head jambs and sills (vertical mullion) or jambs (horizontal) with three 1 1/4″ 16 gauge staples spaced evenly above kerf in wood members. See illustration 5.

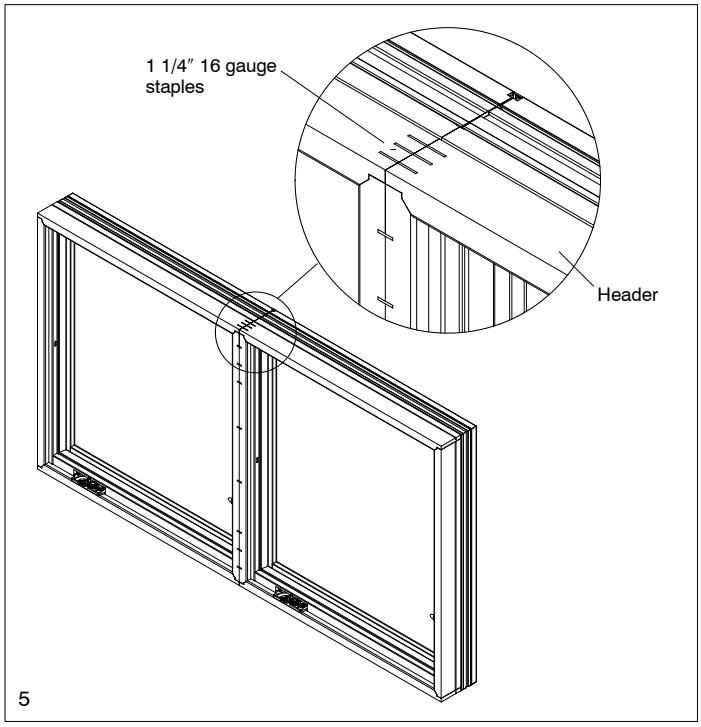

9. Install drip cap on head jamb and nailing fin (if applicable) around perimeter of assembly. Drip cap should be a continuous piece and extend over each jamb approximately 1/16″ (2).
10. If applicable, jamb extension can now be installed. Follow installation instructions enclosed with unit(s) for installing assembly into rough or masonry opening. Interior mull trim should be applied after assembly is completely installed and interior trim is applied.

MULTIPLE HIGH/MULTIPLE WIDE MULLING

ATTENTION: The following are general guidelines to follow when mulling multiple assemblies. Specific techniques and procedures for possible scenarios and configurations are too numerous to cover in this instruction. Consult your Marvin representative before attempting to mull any units in a multiple high and/or wide configuration.

- Mull all multiple high assemblies first. Notch all accessory kerf corners and install horizontal mull clips to all center units. Horizontal mull clips installed on center assemblies should not extend into the vertical accessory kerfs (Vertical mull clips must run the full height of units).
- Once all multiple high assemblies are mulled, follow vertical mulling instructions to mull entire assembly. Notch side accessory kerfs and install remaining horizontal mull clips so that they fit tightly against vertical mull clip.
- On multiple units mulled to single units, continuous mull clip must run the full length of single unit.
- All vertical mull clips must be installed from the top, including those assemblies with uneven head jambs.

IMPORTANT: The assistance of another individual may be necessary in moving or maneuvering multiple assemblies. Always attach temporary bracing at mulls prior to moving assembly.

ROUND TOP FIELD MULLING PROCEDURES

The following instructions are provided for field mulling direct set clad multiple assembly polygons and round top transoms.

WARNING: Only polygons and round tops that are within Marvin Windows and Doors field mulling guidelines should be direct mulled as shown below. Other sizes will require additional structural support (such as mullion reinforcements) or be installed in a separate opening. When mulling specific door or window products, refer to those particular installation instructions and mulling procedures. Contact your Marvin distributor or dealer for additional information.

STANDARD PARTS SHIPPED FOR MULLION

ILLUSTRATIONS (not to scale)	DESCRIPTION AND COLOR	PART/PROFILE NUMBER
	A-104 Mullion Cap 150″ length	BZ 18600499 SW 18800840 BN 18600299 PB 18600399 EG 18600599
	One sided mulling tape - 8 ft. (rectangular units only)	11869508
	Nailing Fin Connectors Appropriate number supplied Package of 2	10500213
	26 gauge 3 1/2″ x 16″ galvanized mulling tin Appropriate number supplied	02070302

YOU WILL NEED TO SUPPLY

Safety glasses
Hearing protection
Sharp chisel
Tape measure
Hammer
Wood block
Clamp
Color matched (or clear) sealant for mull cap ends
16 gauge staples with a 1/2″ crown and 1/2″ leg
16 gauge staples with a 1/2″ crown and 1 1/2″ leg

NOTE: If your clad product has nailing fin applied to mulling surfaces, (i.e., jambs, head jamb and sill) it must be removed before the assemblies can be mulled together. These pieces can be discarded.

1. Lay components to be mulled on a clean flat surface. Some large units may be mulled easier in an upright position. Apply one-sided adhesive backed frame mullion sealant foam mull tape to the jamb or head jamb as shown in illustration 1. Apply a 1/8″ bead of sealant near edge of cladding as shown. Trim tape, leaving an excess of 1/8″ (3) at each end.

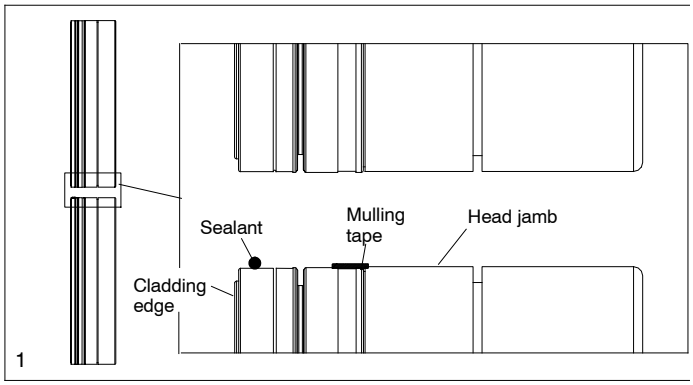

2. Carefully set assembly or assemblies into position.
3. Notch head jamb/sill and or jambs cladding edge as applicable as shown in illustration 2. A sharp chisel works well in this application. *NOTE: This step must be done before mullion cap can be installed.*

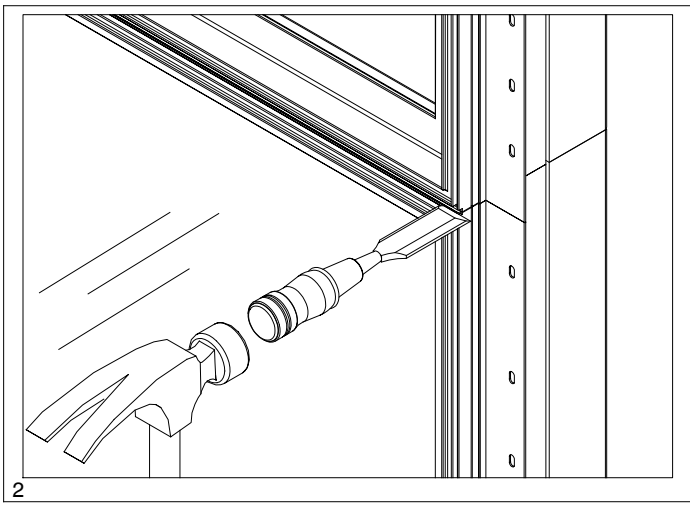

4. Apply mullion cap by tapping into position using a hammer and block of wood. See illustration 3. Carefully guide cap during installation.

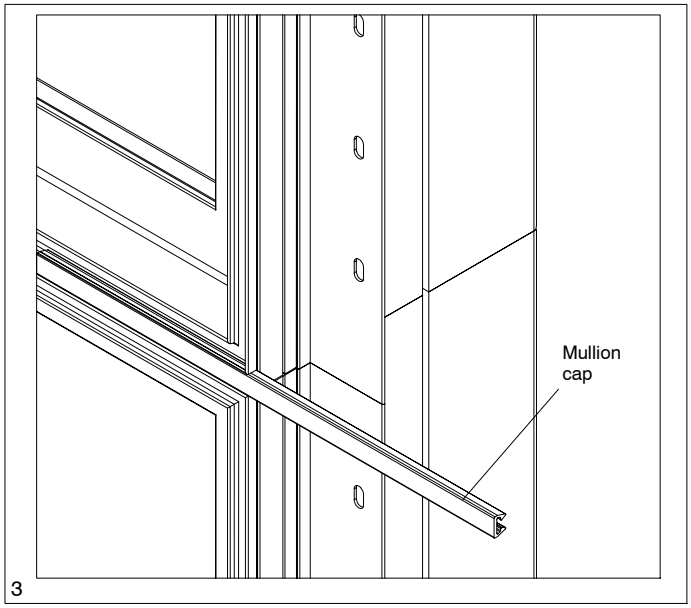

NOTE: After cap is completely installed, remove any excess length and apply sealant to cap ends.

5. Clamp the components together, ensuring the head jamb and or side jambs are flush. Mull the interior components together using 1/2″ x 1 1/2″ 16 gauge staples spaced 4″ (102) apart as shown in illustration 4.

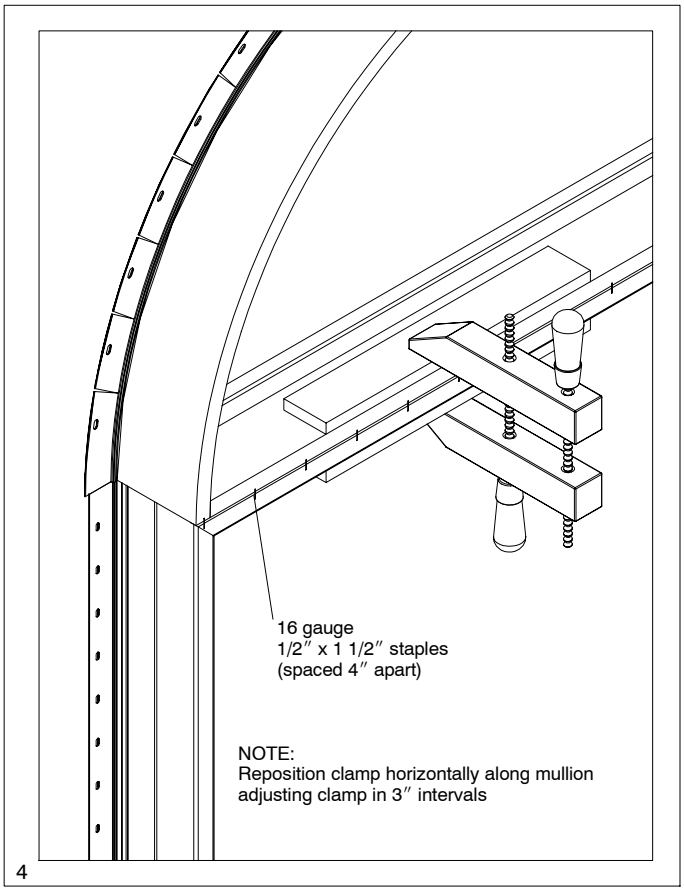

6. Apply mulling tin at mull points (both round tops and polygons) and secure with 16 gauge 1/2″ x 1/2″ staples shown in illustration 5. Certain round tops, using field applied jamb extensions, require the use of joint brackets at the mull. Secure with #7 x 1/2″ Phillips head screws. The bracket will overlap the unit and the jamb extension as shown in illustration 5. If required, additional brackets must be applied adjacent to the first bracket(s). They must be spaced every 2″ of jamb extension depth. The appropriate number of brackets and screws will be supplied.

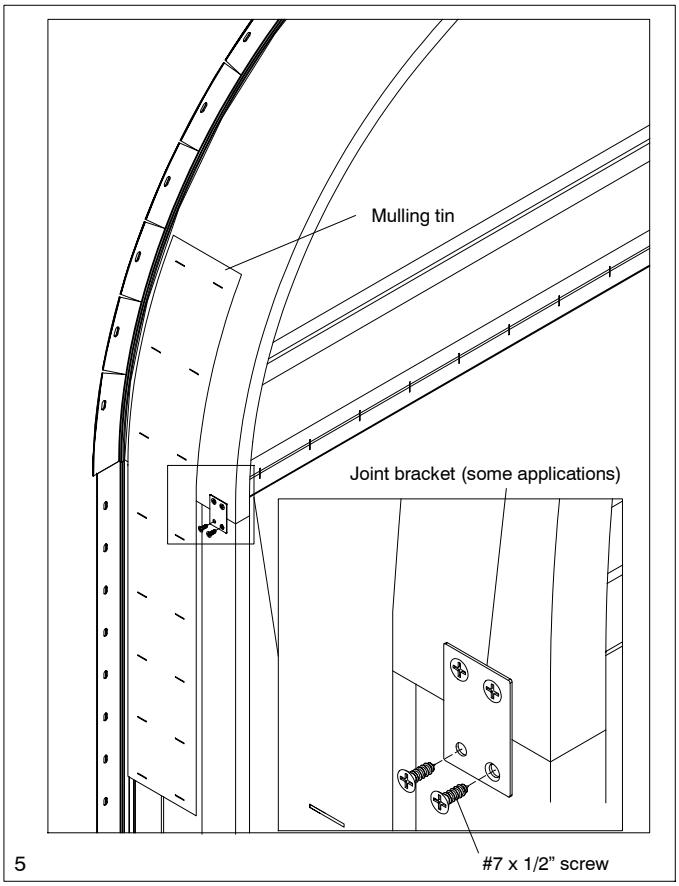

7. Apply sealant on the exterior over and into the joint of the two units from the exterior edge of mulling tin to the exterior surface of the jamb. See illustration 6.

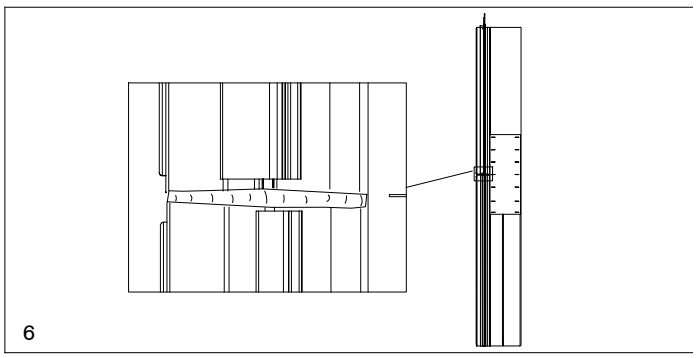

SPACE MULLS

ATTENTION: The following instructions detail space mulling two Clad Casemaster frames either horizontally or vertically. More complex or multiple wide/multiple high configurations may require additional steps not covered here. Consult your Marvin representative for more information prior to attempting to mull units in these configurations.

STANDARD PARTS SHIPPED

ILLUSTRATIONS (not to scale)	DESCRIPTION AND COLOR	PART/PROFILE NUMBER
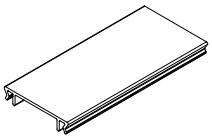	Aluminum mull cover 150″ (3810)	A117 (3/8″) A111 (1″) A112 (2″) A113 (3″) A114 (4″) A116 (6″)
	Frame kerf weatherstrip	15910100
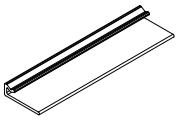	A148 Outside frame trim 150″ (3810) SW BN PB BZ EG AR	 18801440 15224810 15224820 15224830 15224840 15224800
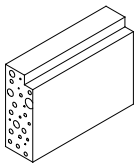	Foam sealant block 96″ (2438)	10500018
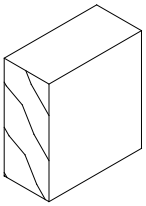	Wood blocking 72″ (1829) W6016 (3/8″) W6128 (1″) W6271 (2″) W6304 (3″) W6466 (4″) W8507 (6″)	 32249310 32249312 32249314 32249316 32249318 32249320

YOU WILL NEED TO SUPPLY

Safety glasses	Plastic headed hammer
Hack saw or chisel	Clamps
Hammer	Staple gun
5/8″ x 1/2″ staples	Tape measure
Wood saw	Scrap wood for bracing

Screen spline roller or similar tool
Power driver with a #2 Phillips bit
Grade NS Class 25 sealant per ASTM C920

Frame Preparation

NOTE: For ease in mulling units, remove operating sash prior to attempting the following procedures

1. Cut blocking in at least 7″ (178) lengths. A minimum of two blocks per mull is necessary, 3 blocks will be needed for mull lengths of 48″ (1219) or greater.

   NOTE: 3/8″ space mull blocking must be cut to fit the full length of the mull.

2. If already applied, remove drip cap and any nailing fin where units will be mulled.

3. Mull any units that will not take a space mull. Follow procedures for standard vertical/horizontal mulling found earlier in this instruction.

NOTE: Mull cap on standard mullions must not extend into the accessory kerf where a space mull cap will be applied.

Mulling Procedures

4. Place units or mulled assemblies on a flat sturdy surface in the desired mulling configuration (interior side up).
5. Clamp space mull blocking to jambs on one frame or sill of transom on horizontal mulls. Make sure blocking is flush with ends of exterior frame and interior surfaces. Fasten with 5/8″ x 1/2″ staples spaced every 1” as shown in illustration 1. Attach blocking to both ends and one at the center of frame on mull lengths over 48″.

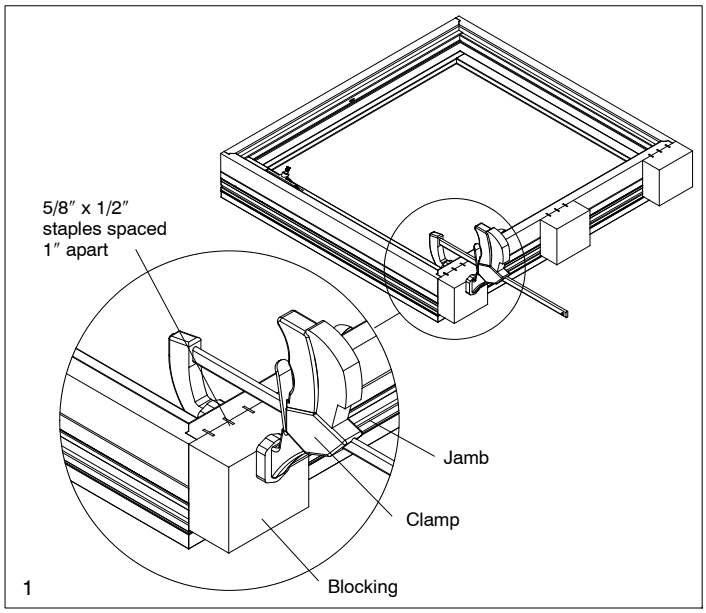

6. Clamp frames together making sure interior surfaces are flush and units are even at the mull. Fasten in the same manner as before. Attach blocking to head jamb and sill or jambs with 5/8″ x 1/2″ staples. See illustration 2.

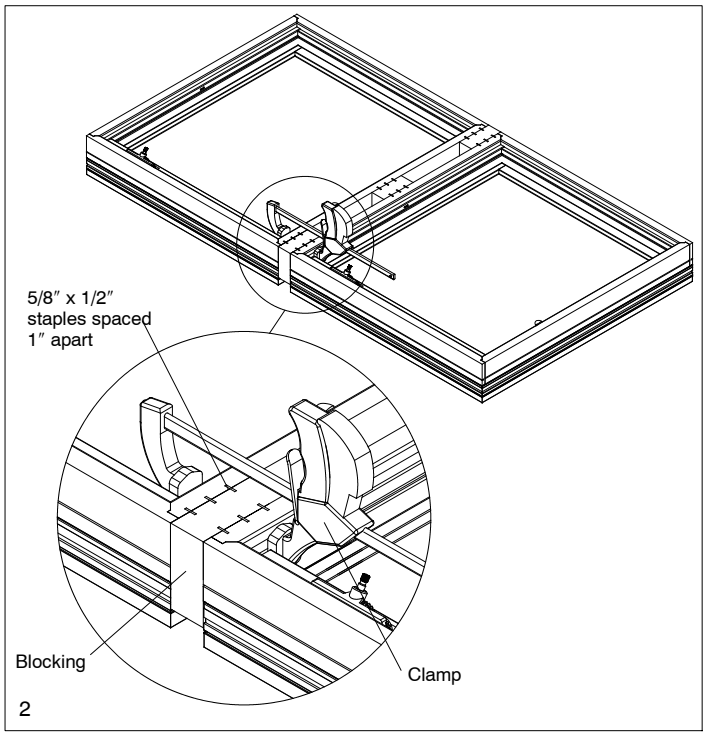

7. At this point it will be necessary to attach bracing to frames across the mull. This will reduce stress to the mullion and avoid possible damage to frames while moving assembly. See illustration 3.
8. Carefully turn assembly over so the exterior is facing up.
9. Notch all accessory kerf corners where a space mull will be placed. Using a hammer and chisel or hack saw remove enough material on both sides to allow the A148 frame trim to pass (approximately 7/32″ (6)). See illustration 3.

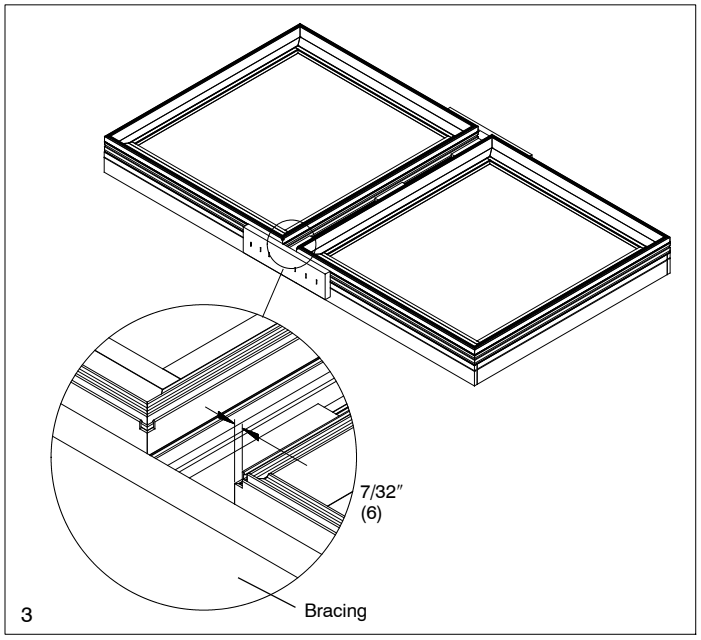

3

10. Using a screen spline roller or similar tool, run a continuous length of frame kerf weatherstrip in accessory kerf at mullion and with accessory kerfs that run perpendicular to mullion. Apply sealant at mullions over the weatherstrip 2–3″ from each corner. See illustration 4.

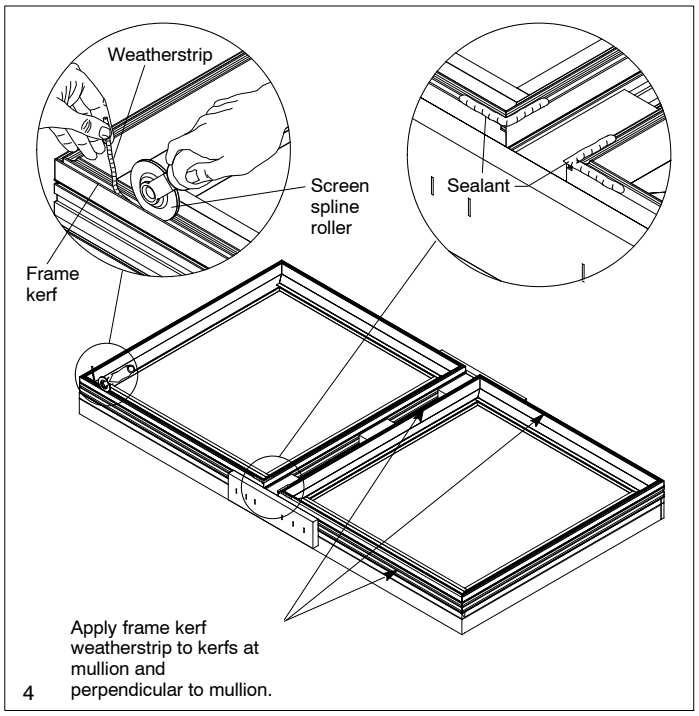

4

NOTE: On multiple wide units, the middle frame(s) should have a continuous length of frame kerf weatherstrip applied to the entire perimeter with weatherstrip slightly overlapping at ends.

11. Measure the width of the mulled assembly at inside edge of frame accessory kerf as shown (distance perpendicular to the mull). Cut two pieces of outside frame trim (A148) using a hacksaw or power miter saw.
Note: It will not be necessary to install outside frame trim if clad brick mould casing will be applied later.
12. Apply sealant to frame. Install outside frame trim on accessory kerf as shown. Make sure trim fits before pounding into place with a plastic headed hammer. Some trimming may be necessary. See illustration 5.

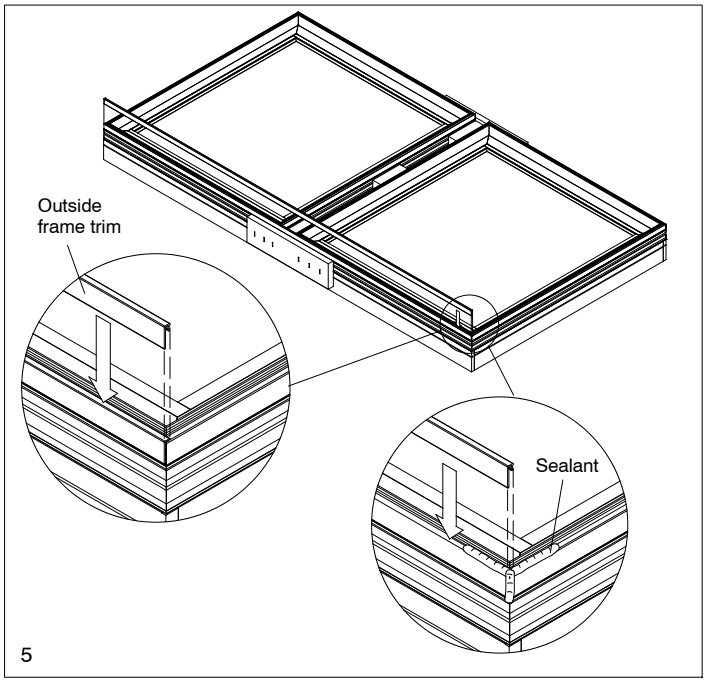

5

13. Run a 1/4″ (6) bead of sealant/adhesive on mull blocking at edge of mull and sides approximately 2 1/2″ (64) back. Cut pieces of foam block 1/8″ wider than the mull and press into adhesive as shown in illustration 6. This must be done on both ends of the mull.

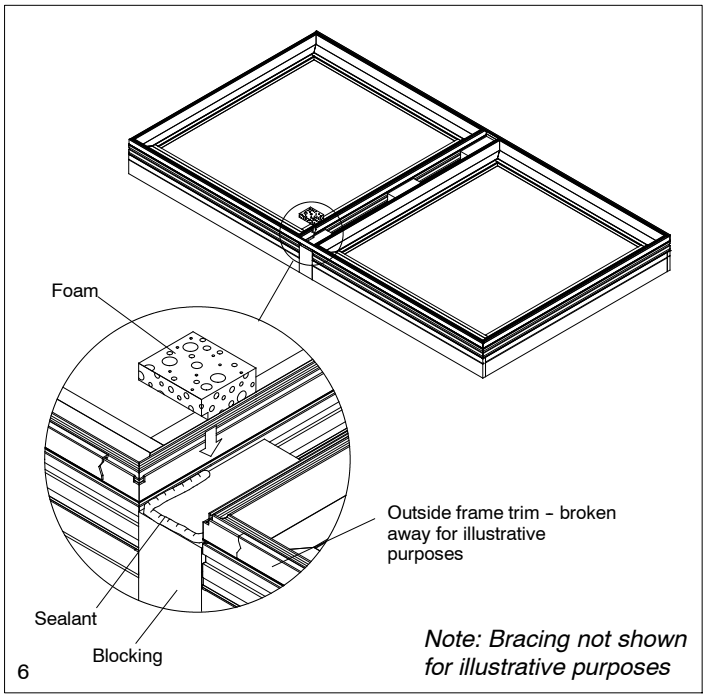

6

14. Lay another bead of sealant on foam block even with cladding as shown in illustration 7.

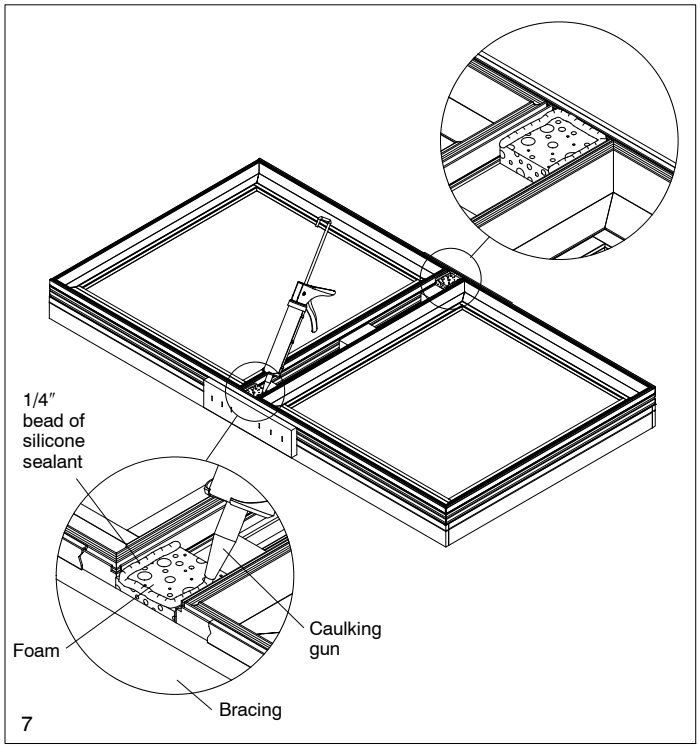

15. Measure the distance of the mullion from the inside edge of the A148 frame trim as shown in illustration 8. Carefully cut the mull cap to measured length with a hacksaw or power miter saw.

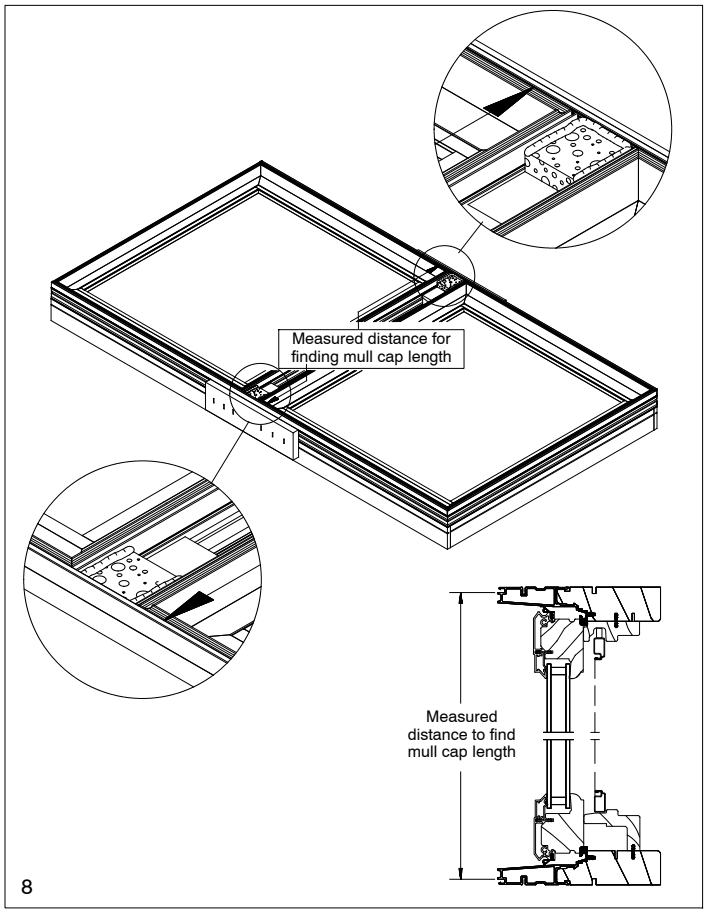

16. Place mull cap even with interior edge of frame accessory kerf as shown and carefully tap onto frame with a plastic headed hammer and wood block. See illustration 9.

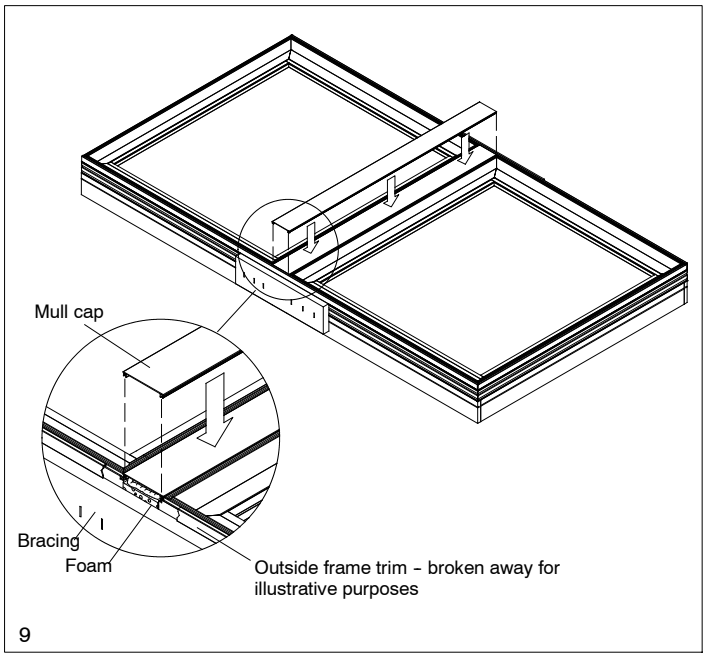

17. Clean any excess sealant squeeze out or residue from assembly.
18. Install drip cap on head jamb and nailing fin (if applicable) around perimeter of assembly. Drip cap should be a continuous piece and extend over each jamb approximately 1/16″ (2).
19. If applicable, jamb extension can now be applied. Follow installation instructions provided for installing unit in rough or masonry opening. Interior mull trim should be applied after unit is completely installed and interior casing is applied.

3/8″ STRUCTURAL MULL REINFORCEMENT

ATTENTION: (N/A for CURCA units.) The following instructions detail mulling two Clad Casemaster frames either horizontally or vertically utilizing mull reinforcement . More complex or multiple wide/multiple high configurations may require additional steps not covered here. Consult your Marvin representative for more information before attempting to mull units in these configurations.

MULL REINFORCEMENT KIT - 150″ (3810)	
COLOR	**PART NUMBER**
BZ	11873143
SW	11873145
BN	11873141
PB	11873142
EG	11873144
AR	11873140

STANDARD PARTS INCLUDED W/KIT		
ILLUSTRATIONS (not to scale)	**DESCRIPTION AND COLOR**	**PART/PROFILE NUMBER**
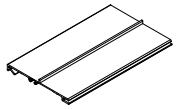	A302 Mull reinforcement steel – mill finish (RH) 150″ (3810)	16075000
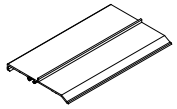	A303 Mull reinforcement steel –white (LH) 150″ (3810)	16074000
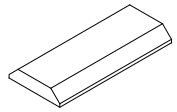	W1242 Mull trim 150″ (3810)	32249198
	Frame kerf weatherstrip 25′ (7620)	15910100
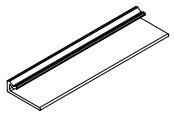	A148 Outside frame trim 2 pieces 150″ (3810) SW BN PB BZ EG AR	18801440 15224810 15224820 15224830 15224840 15224800
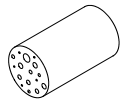	3/4″ Foam backer rod 13′ (3962)	10500228
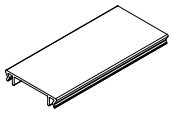	A117 Aluminum mull cover 150″ (3810) SW BN PB BZ EG AR	18800980 18601410 18601420 18601430 18601440 18601400
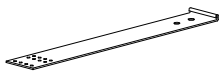	4– Structural masonry brackets	11860012

STANDARD PARTS INCLUDED W/KIT		
ILLUSTRATIONS (not to scale)	**DESCRIPTION AND COLOR**	**PART/PROFILE NUMBER**
	2 pkgs. of 32– #7x5/8″ Phillips self tapping flat head wood screws	11873002
	1 pkg. of 16– #7x 1/2″ Phillips pan head screws	11873000
	1 pkg. of 4– #8x5/8″ Phillips pan head wood screws	11873010

YOU WILL NEED TO SUPPLY

Safety glasses	Plastic headed hammer
Hacksaw or chisel	Hammer
Clamps	Tape measure
Staple gun	Circular saw
Construction adhesive	Screen spline roller or similar tool

Power driver with a #2 Phillips bit
Grade NS Class 25 Sealant per ASTM C920

Frame Preparation and Assembly

1. Mull any units that will not take structural mull reinforcement. Follow procedures for vertical or horizontal mulling configurations found earlier in this instruction.
2. Place units to be mulled on a flat sturdy surface, exterior side up in the desired mulling configuration. Notch all accessory kerf corners where a structural mull reinforcement will be placed. Using a hammer and chisel or hack saw, remove enough material from jamb side and headjamb and/or sill side of accessory kerf to allow the mull cap and outside frame trim to pass. See illustration 1.

NOTE: Illustration below shows a two wide two high assembly with vertical mull reinforcement. Notching may vary depending on configuration. Contact your Marvin representative for more details.

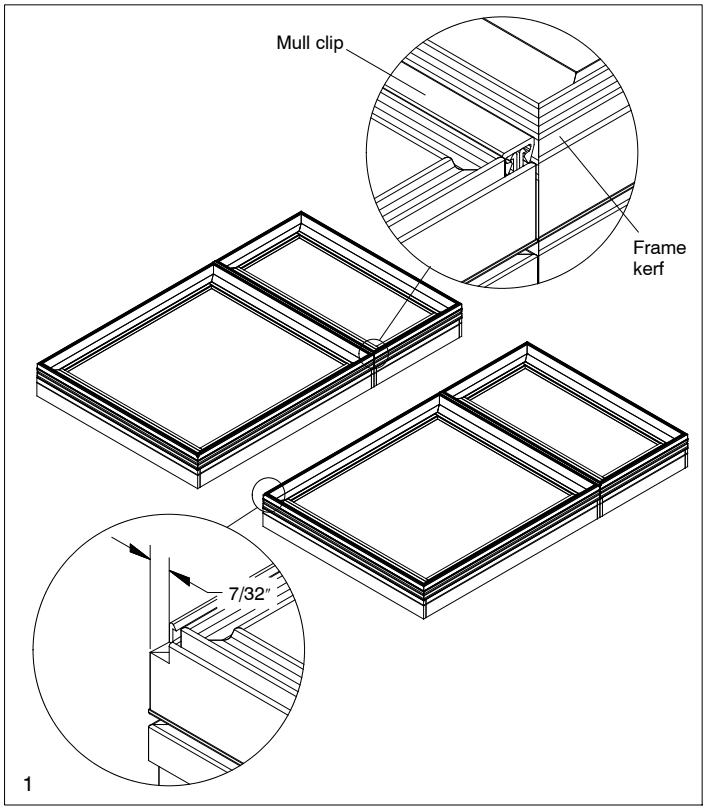

3. Using a hacksaw or hammer and chisel, remove material from wood kerf where head jambs and sills meet the jamb so that the kerf will be extended to receive the mull reinforcement. This will allow the reinforcement to run the full length of the mullion rather than stop short at the headjamb/sill to jamb intersection. See illustration 2.

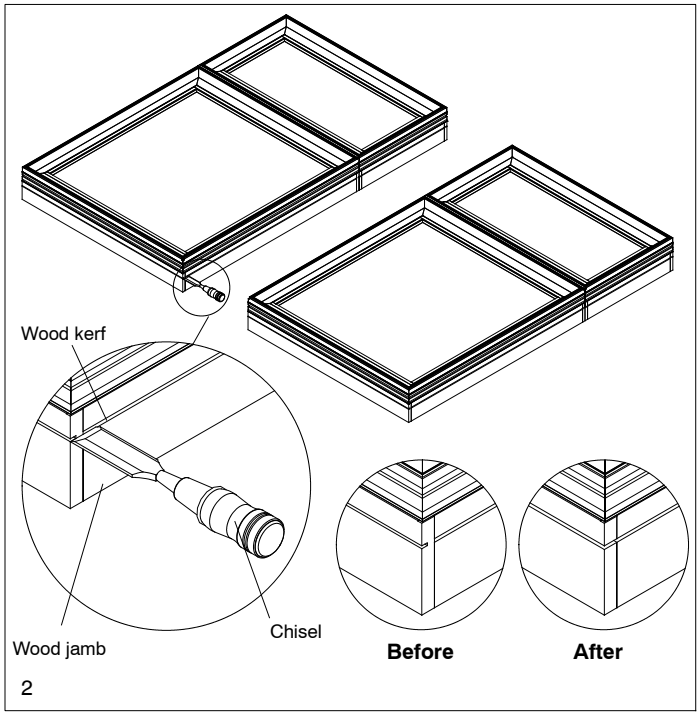

4. Measure the length of the structural mull and cut steel mull reinforcement using a power miter saw or hacksaw.
5. Apply a 5/8″ (16) continuous bead of construction adhesive on both sides of accessory groove. See illustration 3.

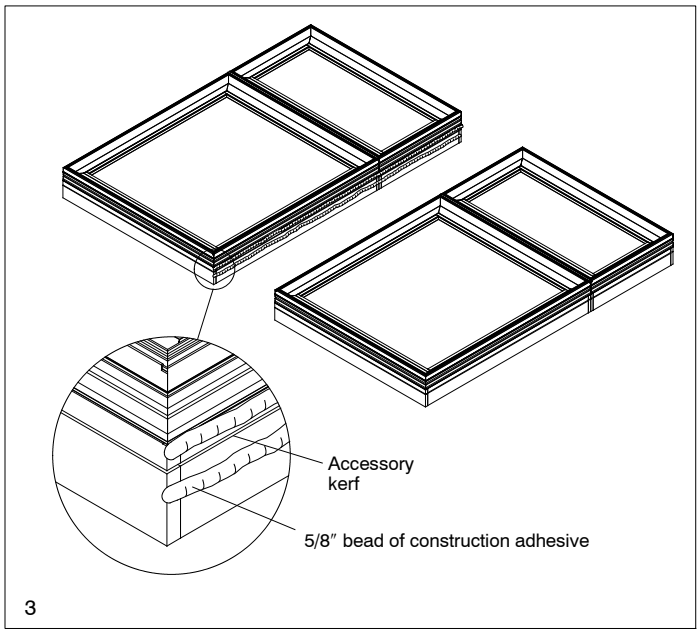

6. Place the white finish mull reinforcement on the left hand jamb or sill of transom unit. Place the mill finish mull reinforcement on the right hand jamb or head jamb of lower unit. Set the reinforcement components into the groove on frame. The mill finish reinforcement will have a “Y” shaped channel toward the interior. Install the white reinforcement with the flat side to interior. See illustration 4.

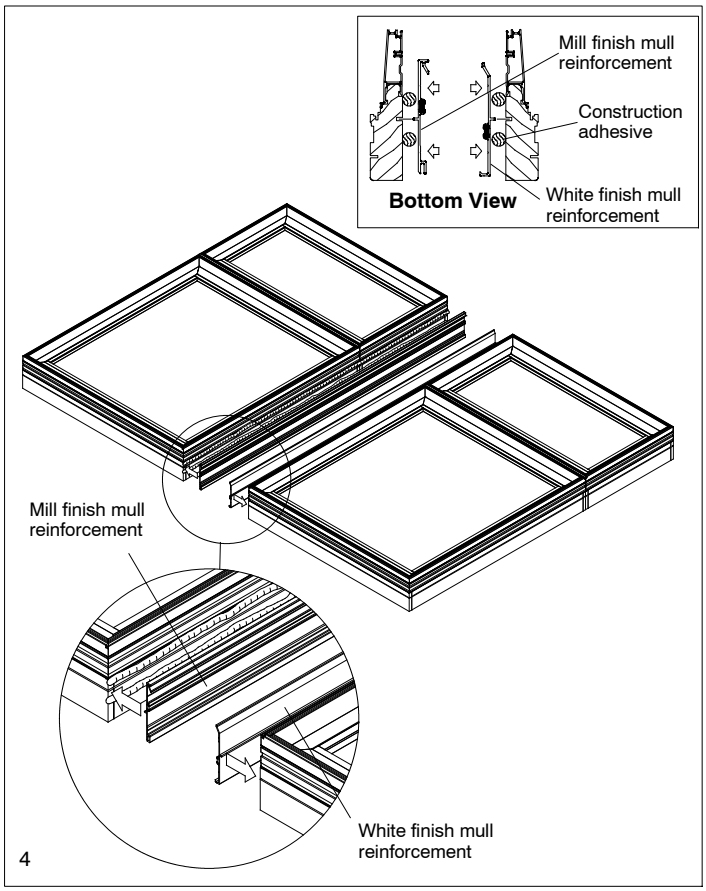

7. Press the mull reinforcement components firmly into place and fasten to frame with #7 x 5/8″ self tapping wood screws using the pre-drilled screw holes.
8. Repeat procedures to install additional reinforcements for all frames in mull assembly.
9. Connect frames by carefully hooking both parts of reinforcement together. Make sure window frames are aligned at ends of mullion and reinforcement components are fully engaged. See illustration 5.

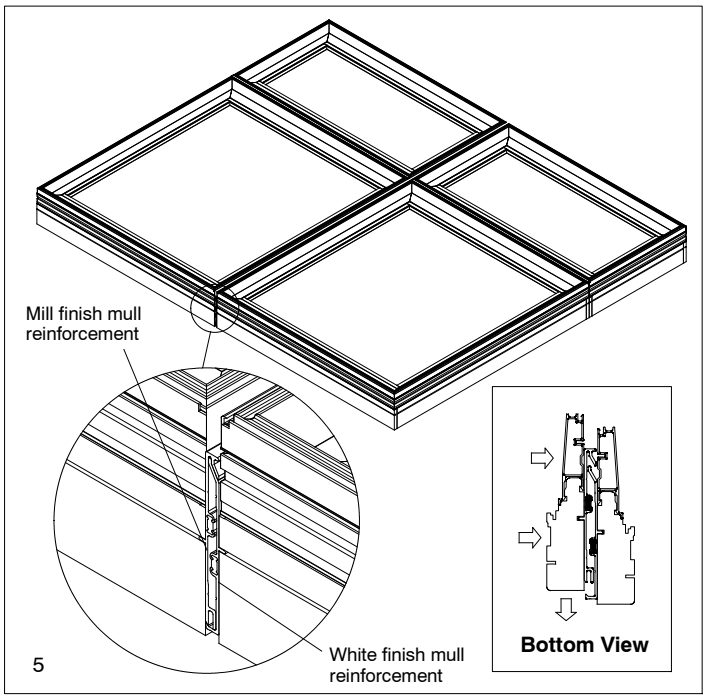

Sealing the Assembly

10. Using a screen spline roller or similar tool, run a continuous length of frame kerf weatherstrip in accessory kerf at mullion and in accessory kerfs that run perpendicular to mullion. See illustration 6.

NOTE: On multiple wide units, the middle frame(s) should have a continuous length of frame kerf weatherstrip applied to the entire perimeter with weatherstrip slightly overlapping at ends.

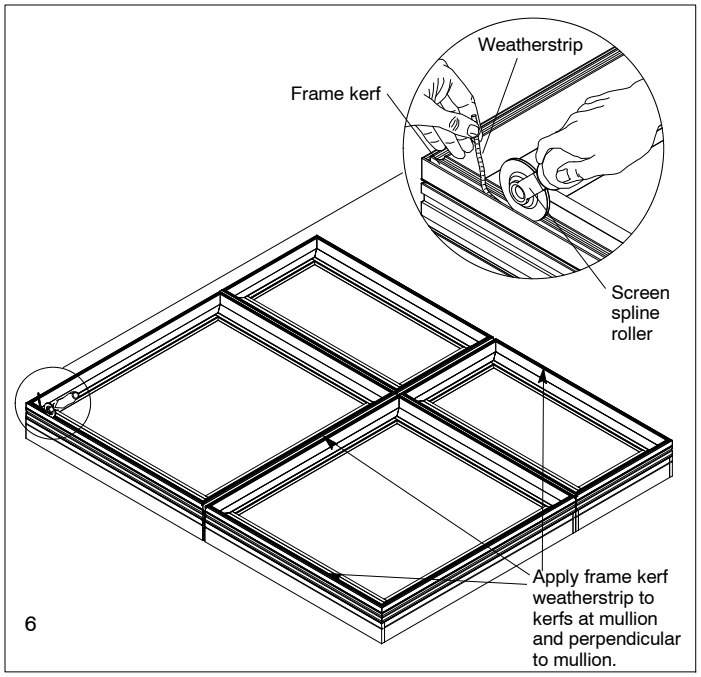

11. Measure the outside width of the mulled assembly (distance perpendicular to the mull). Subtract 5/32″ (4) and cut two pieces of outside frame trim (A148) to adjusted measurement using a hacksaw or power miter saw.

NOTE: It will not be necessary to install outside frame trim if clad brick mould casing will be applied later.

12. Install outside frame trim on accessory kerf as shown. make sure trim fits before pounding into place with a plastic headed hammer. Some trimming may be necessary. See illustration 7.

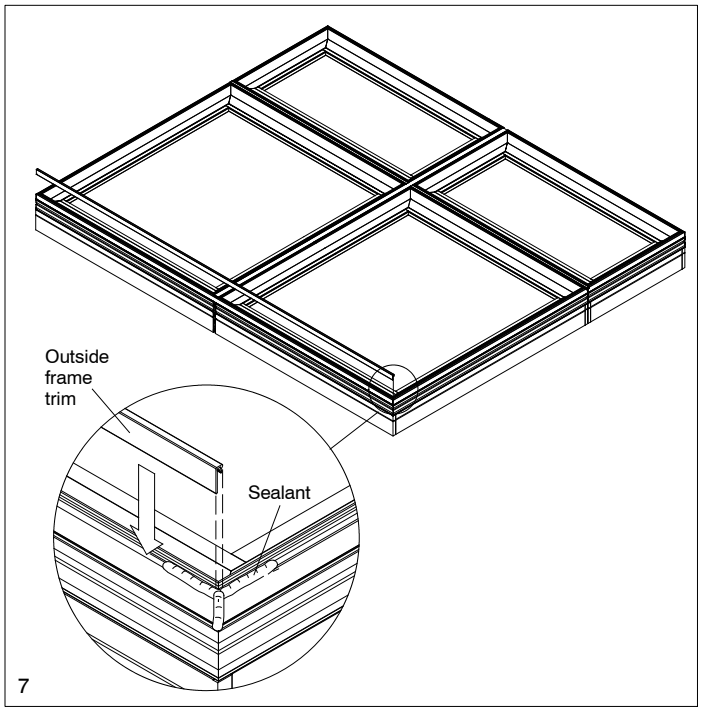

13. Place a large bead of sealant approximately 2″ (51) long on both ends of mull reinforcement. Insert 3/4″ foam backer rod over the mull reinforcement components as shown in illustration 8.

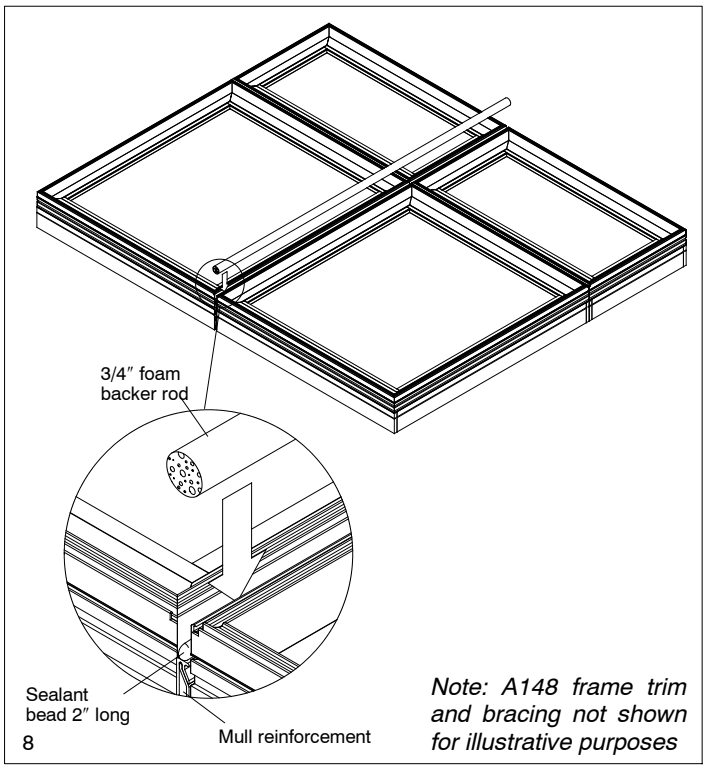

14. Measure the distance of the mullion from the inside edge of the frame trim as shown in illustration 9. Carefully cut the mull cover to measured length with a hacksaw or power miter saw.

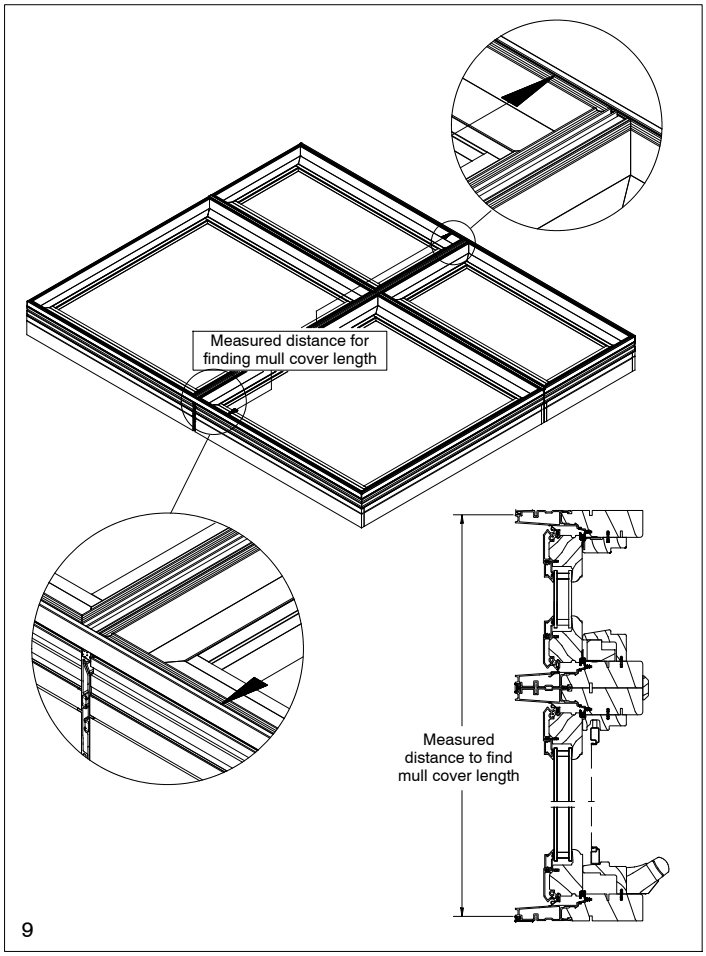

15. Apply a thick bead of sealant approximately 2″ long over the ends of the foam backer rod to the height of the cladding as shown in illustration 10. On assemblies where two mullions meet, apply two 4-6″ (102-152) beads of sealant vertically over the frame kerf weatherstrip at mull junction as shown in illustration 10.

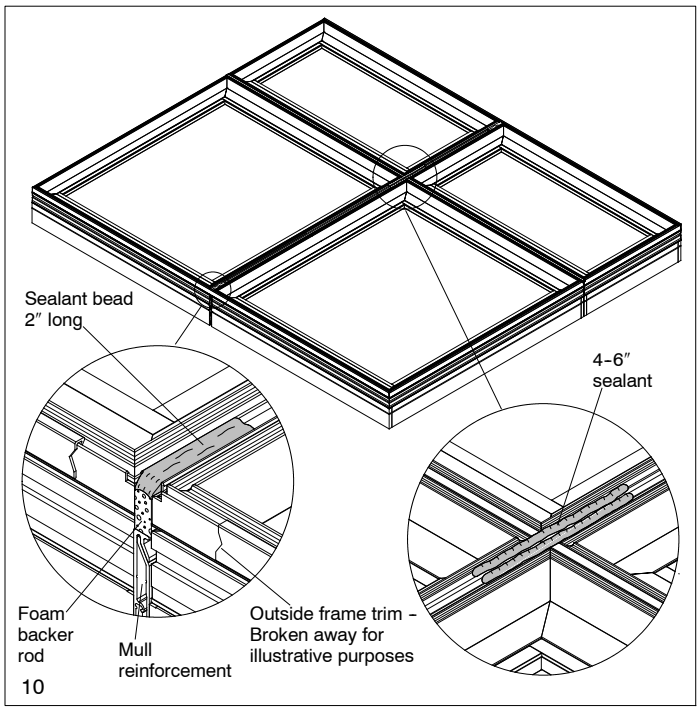

10

16. Place mull cap even with interior edge of accessory kerf as shown and carefully tap onto frame with a hammer and wood block. See illustration 11.

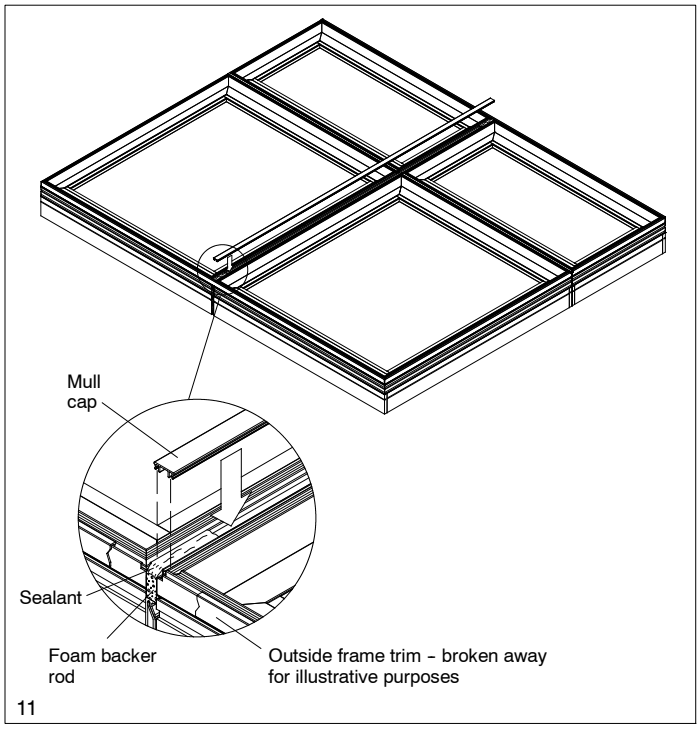

11

17. Clean any excess sealant squeeze out or residue on mullion components.

18. From the interior, secure the two reinforcement components together. Using the pre-drilled screw holes, attach components together with #7x1/2″ Phillips pan head screws. See illustration 12.

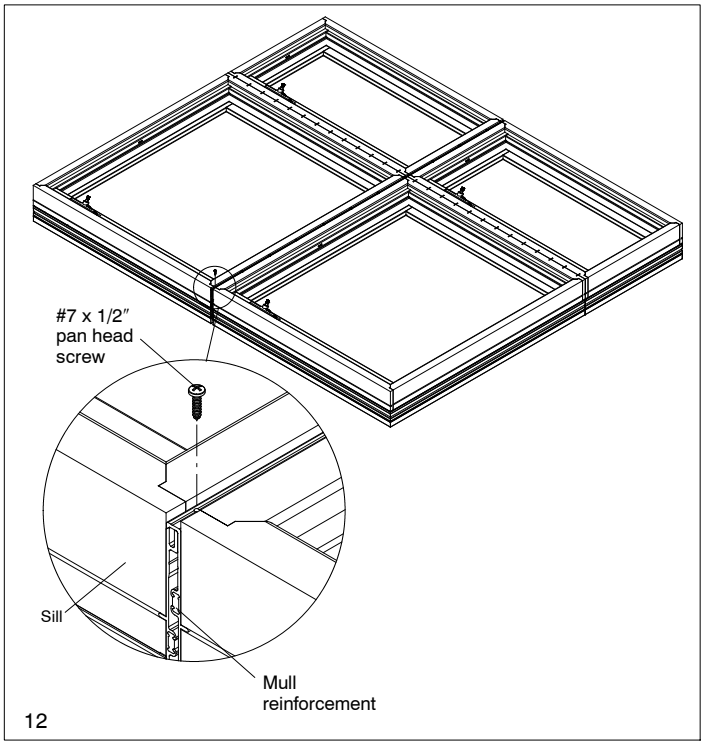

12

19. Attach masonry brackets at headjamb and sill on both sides of mullion. Place the hooked end of the bracket in the clad accessory kerf (with opposite end toward the interior). Fasten to frame with one #8 x 5/8″ pan head screw. See illustration 13.

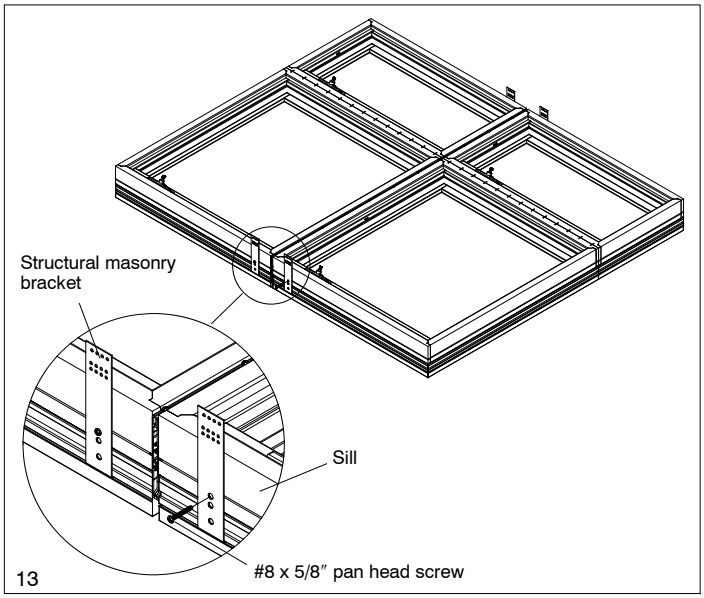

13

20. Install drip cap on head jamb and nailing fin (if applicable) around perimeter of assembly. Drip cap should be a continuous piece and extend over each jamb approximately 1/16″ (2).

21. If applicable, jamb extension can now be applied. Follow installation instructions provided for installing unit in rough or masonry opening. Interior mull trim should be applied after unit is completely installed and interior casing is applied.