Round Top Clad Brick Mould Casing

Field Applied Installation Instructions for 1 5/16″ and 1 5/8″ Casing

MARVIN Windows and Doors

WARNING: Practice safety! Wear safety glasses or goggles and appropriate hearing protection when cutting and assembling brick mould casing components.

STANDARD PARTS SHIPPED

ILLUSTRATIONS (not to scale)	DESCRIPTION AND COLOR	PART/PROFILE NUMBER
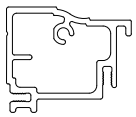	Clad brick mould casing radius & lineal	A898 – 1 5/16″ or A228 – 1 5/8″
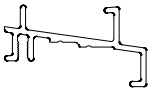	Subsill (not used on door products)	A246
	Frame kerf weatherstrip.	15910100
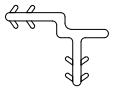	Connecting barb.	V087
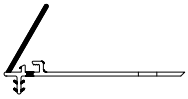	Radius nailing fin	V088
	Sill nailing fin	V084
See below	Round Top field applied package	11850118

Round Top Field Applied CBMC Package 11850118

ILLUSTRATIONS (not to scale)	DESCRIPTION AND COLOR	PART/PROFILE NUMBER
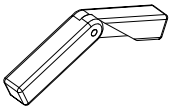	2″ Pivoting corner keys.	11870477
	Two #8 x 1 1/2″ Phillips panhead stainless steel.	11808110
	#8 x 5/8″ Phillips panhead stainless steel screws (not used on door products).	11800498
	#7 x 5/8″ Phillips flathead stainless steel screws.	11800734
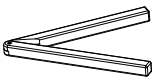	6″ Pivoting corner keys. For splicing.	11870479
	Round Top Installation Instructions	11708561

YOU WILL NEED TO SUPPLY

Safety glasses	Hearing protection
Rubber mallet	Utility knife
Screen spline roller	Hacksaw
Chisel	Hammer
7/64″ drill bit	Countersink bit for metal (82 degree)
2′ – 3′ straightedge	1″ x 3″ x 3/16″ wood shim (scrap)

Compound power miter box saw with metal cutting blade
Power drill/driver with Phillips head screw bit
Sealant – *Grade NS Class 25 per ASTM C920*

ATTENTION: Specifications and technical data are subject to change without notice.

IMPORTANT: Oval, circle and reverse miter applications have intentionally been left out of these instructions due to the fabrication and assembly complexities. Marvin Windows and Doors recommends that these applications be factory applied to ensure the CBMC fits and performs properly.

ROUND TOP CLAD BRICK MOULD CASING INSTALLATION PROCEDURES

1. Lay unit on a flat surface with the exterior side of the unit facing upward. Remove any standing blocks from sill of unit. Remove nailing fin around perimeter of frame if it was factory applied.
2. It will be necessary to notch the frame accessory kerf prior to installing the clad brick mould casing. This will allow jamb casing to seat against the subsill. The jamb corners at the sill (see exceptions below) must be notched as shown in illustration 1 as indicated by specific product type. Use a hacksaw or hammer and chisel to accomplish this step.

NOTE: Do not notch at the sill on door products. Additionally, mulled Double Hung or Glider products should not be notched on the sill at the mull joint.

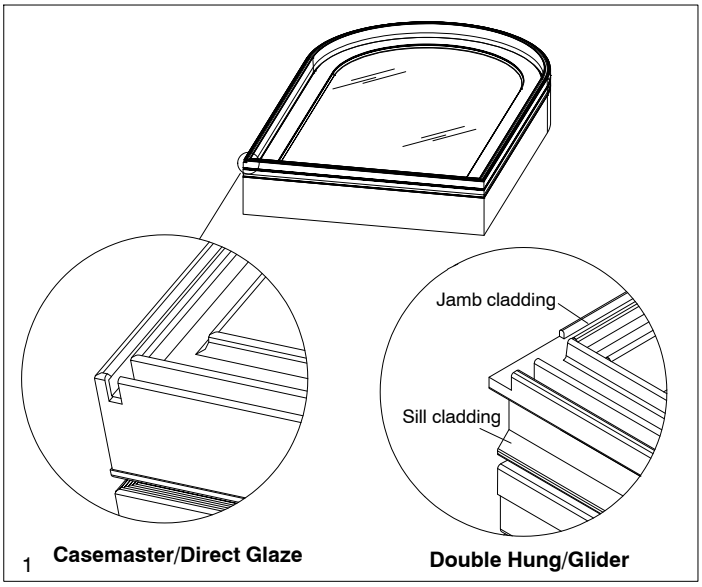

1 **Casemaster/Direct Glaze** **Double Hung/Glider**

3. It will be necessary on multiple and mulled units to ensure the mull cap does not extend into the kerf. Remove excess material in a vertical and/or horizontal fashion to open the kerf. Cut this notch using a hammer and chisel. See illustration 2. On space mulled units where A148 outside frame trim is installed, notching is not necessary. Remove trim from sill, head jamb, and/or jambs before proceeding.
4. Apply silicone sealant at all mull joints where cladding has been notched. See illustration 2.

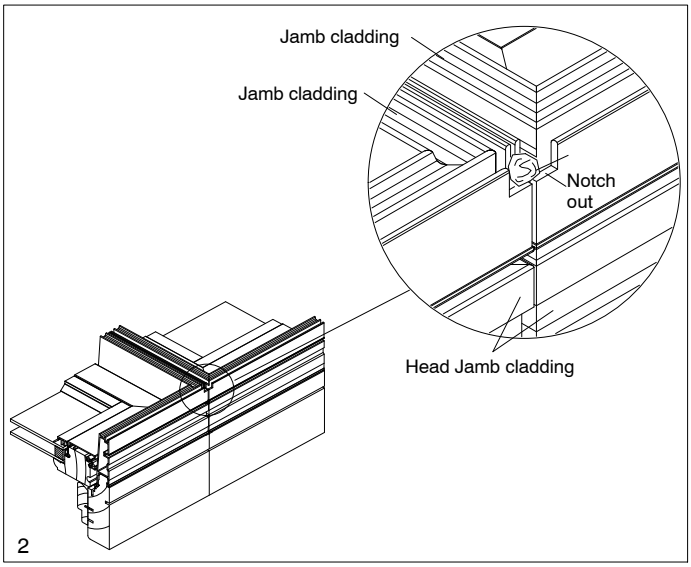

5. Install frame kerf weatherstrip around frame kerf perimeter, using a screen spline roller. See illustration 3. If possible splice at top corners ensuring there is no gap at the splice. If you are installing clad brick mould casing on a door product skip to Step 7.

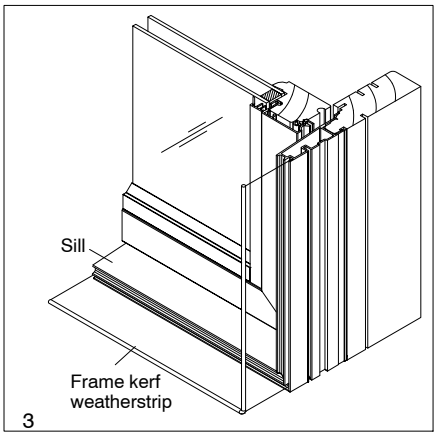

FABRICATION PROCEDURES

CAUTION: **To avoid binding and risk of possible injury place a shim under CBMC while cutting to provide support while positioned in the power miter box. This applies to all steps below that involve cutting on a power saw. Always wear proper eye and ear protection when cutting.**

6. Measure outside width of unit and add the appropriate length according to the table below. Using a power miter saw cut subsill to measured length. Measure and mark both ends of subsill using table below. Notch ends of subsill by removing ridged material with a hacksaw or chisel as shown in illustration 4.

Casing	Added Subsill Length	End Notch Length
1 5/16″	2 5/8″ (67)	1 1/2″ (38)
1 5/8″	3 1/4″ (83)	1 13/16″ (46)

7. Using the appropriate template in illustration 5 below, mark ends of subsill and drill a pilot hole with a 7/64″ drill bit through top of subsill.

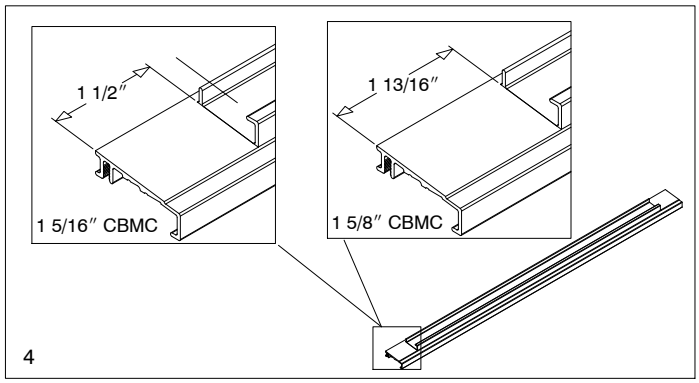

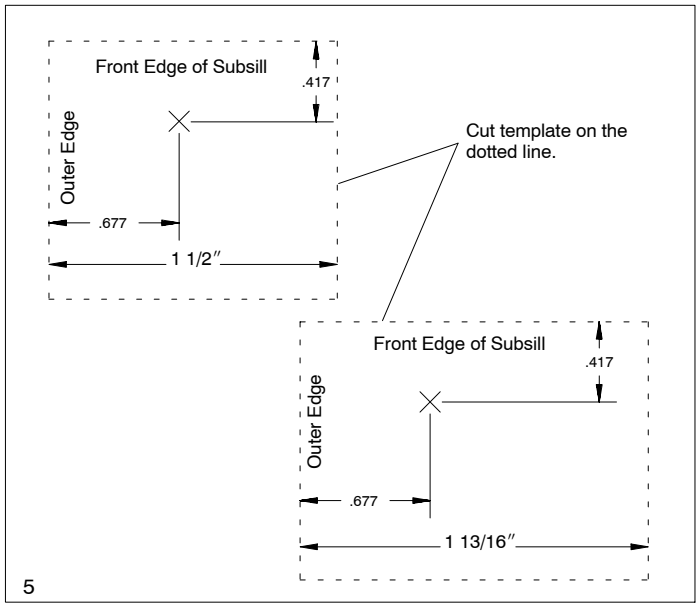

8. If not notched, notch out the metal kerf at the top of the side jamb to accept the radius head jamb BMC. See illustration 2.
9. Lay the head jamb radius brick mould casing on the kerf of the round top portion of unit ensuring it is centered. When in position, secure into kerf using the rubber mallet if necessary. Mark frame and CBMC with a pencil or tape for indexing position later as shown in illustration 6. If your brick mould casing is one continuous piece, skip to Step 12.

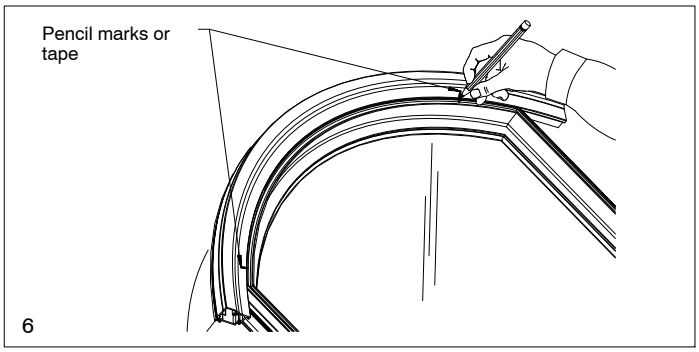

IMPORTANT: When cutting and handling, especially the large continuous pieces of brick mould casing, it is advisable to get the assistance of another individual.

10. Next lay the side jamb brick mould casing onto the kerf ensuring the top touches the radius portion as shown in illustration 7. Using a straightedge along the jamb CBMC mark both the outside and inside of the radius portion as shown in illustrations 7 and 8.

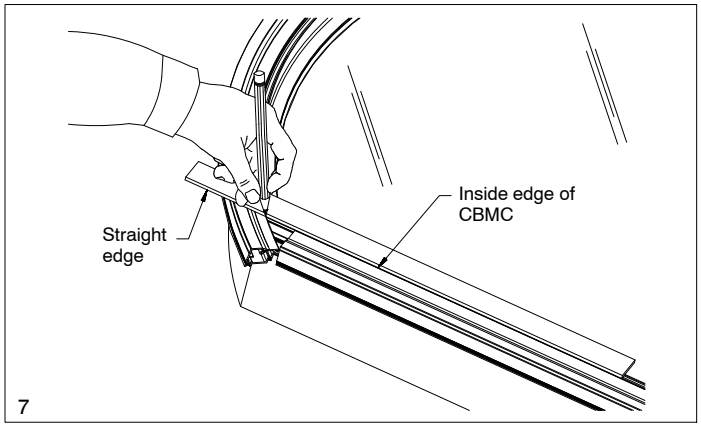

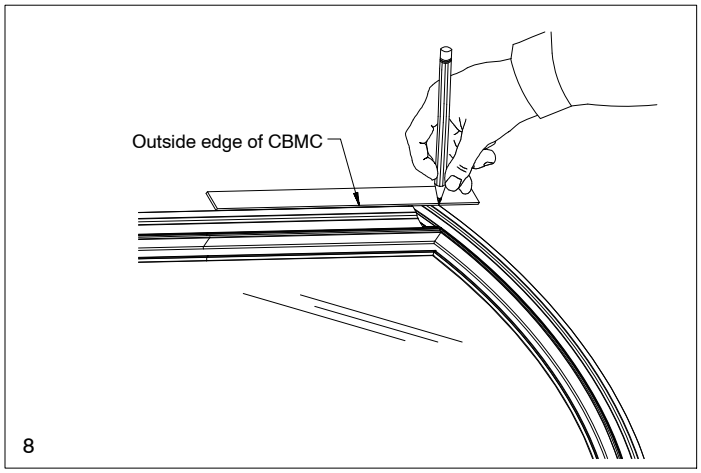

11. For applications that require a spliced joint mark parallel with mull cap, approximately 3/8″ (10) below the mull cap. See illustration 9. For spring line applications measure 1″ (25) from the spring line (where the radius stops) on the exterior of the radius CBMC on both sides and mark in a parallel fashion.

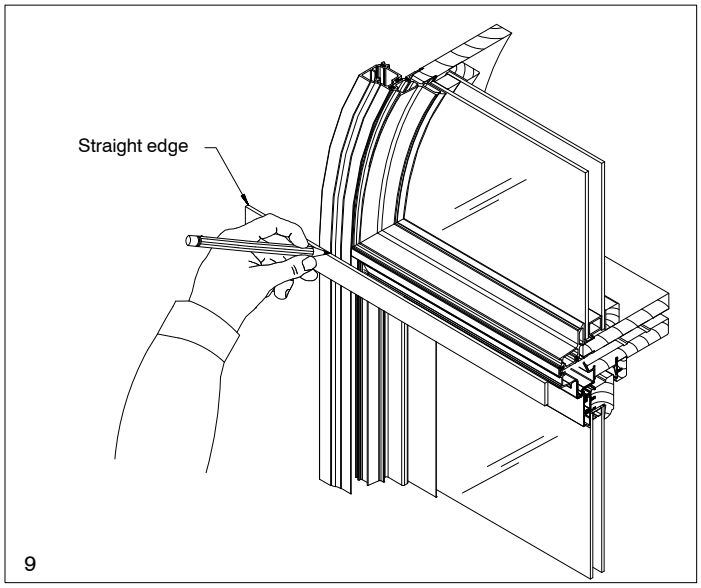

12. Using a straightedge, intersect the two lines to mark the angle needed to be cut as shown in illustration 10. Remove radius CBMC from frame. Place a 1″ x 3″ x 3/16″ shim under the CBMC to provide support while positioned in the power miter box as shown in illustration 10. Cut the angle making sure the cutting line remains visible.

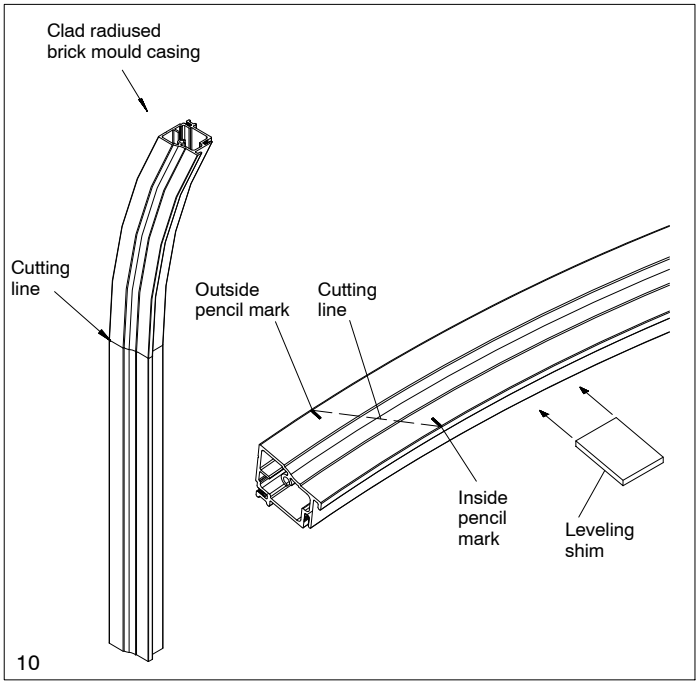

13. Apply the V087 connecting barb to accessory kerf on the radius portion of the unit (entire perimeter for continuous CBMC). If you are using continuous CBMC skip to step 15. Radius CBMC must first be lined up with the guide marks, then pressed into position by hand as shown in illustration 11. After components have been attached initially use a rubber mallet to secure firmly around the perimeter of the frame.

CAUTION: **Do not force if binding occurs as damage may result to the frame and brick mould casing.**

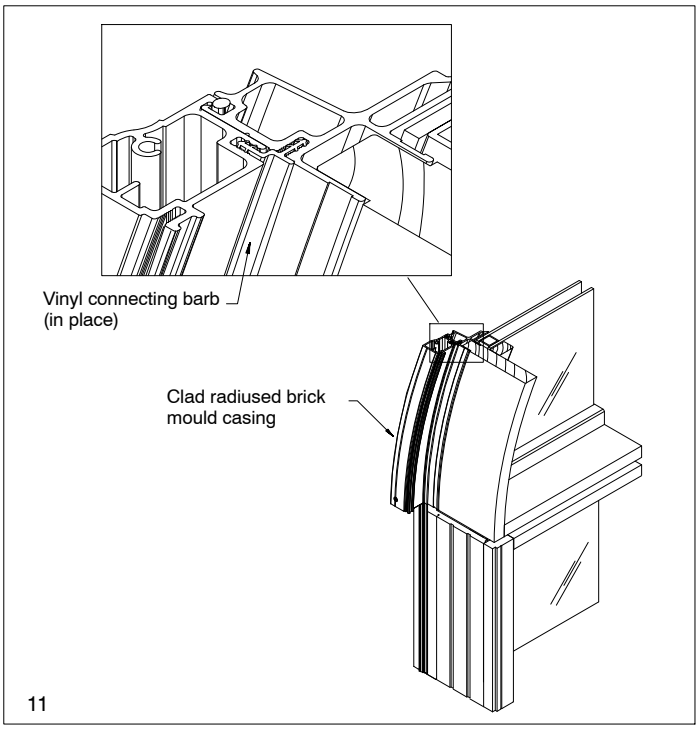

14. Temporarily install jamb CBMC making certain that the top of jamb CBMC touches the radius portion as shown in illustration 12.

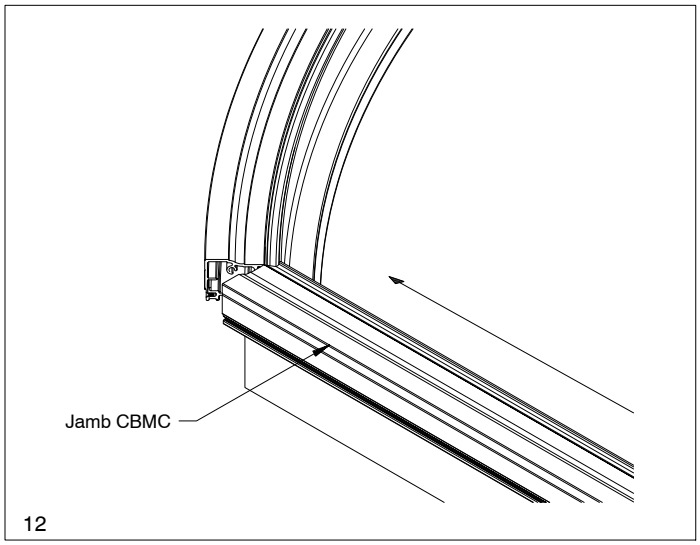

15. Using a straightedge, transfer the angle on the radius portion to the jamb CBMC as shown in illustration 13. Repeat this procedure for both jamb CBMCs. Remove and cut the angle scribed on the CBMC with the power miter box saw. Ensure the cutting line remains visible.

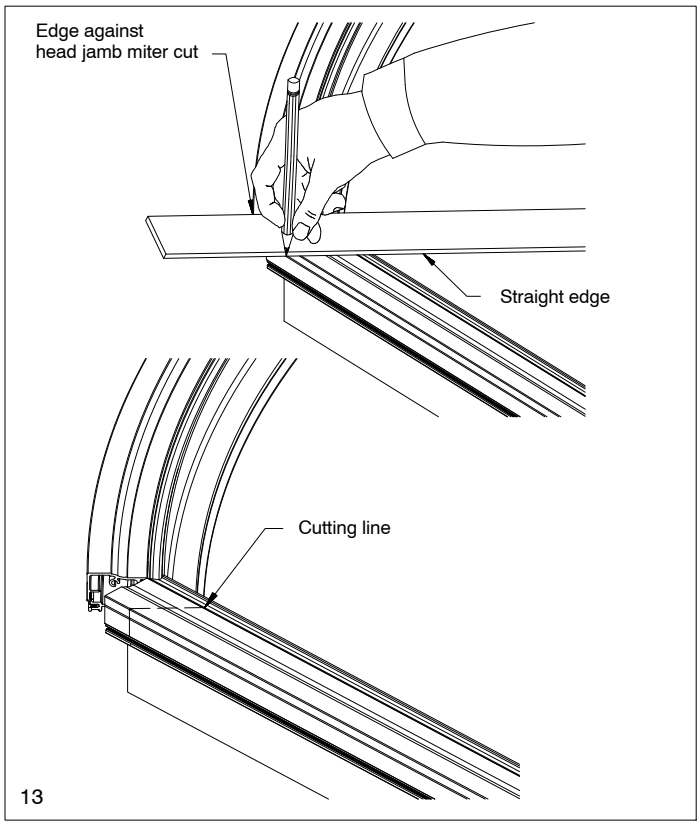

16. Reinstall the jamb CBMC, checking to make sure the miter joints are accurate and tight (if applicable). Temporarily install the subsill (window products only) and slide against the inside of the CBMC as shown in illustration 14.

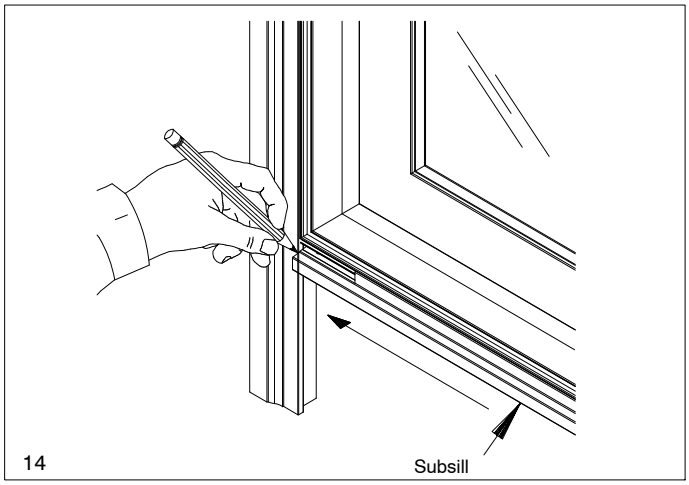

17. Use a straightedge and mark the bottom of the casing as shown in illustration 15 ensuring the subsill is pushed firmly against the sill.

NOTE: On door products, simply use the top of the existing sill to transfer the cutoff line. Accomplish this task for both jamb casings.

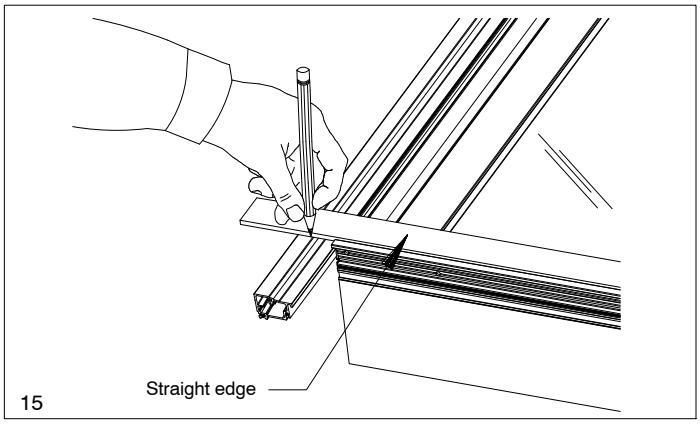

18. Remove and cut as shown in illustration 16, ensuring the cutting line remains visible. Check fit, then remove subsill and jamb CBMC.

NOTE: Window products are cut at an 8 degree bevel, while doors are cut at 90 degrees.

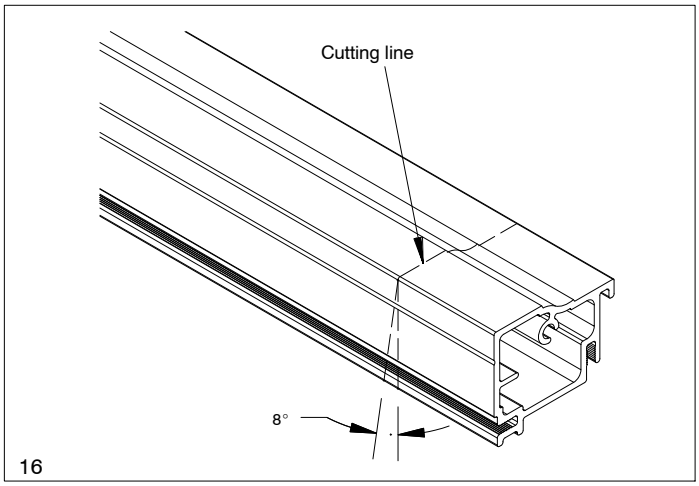

19. If your CBMC is one continuous piece skip to Step 19. For angled cut applications insert 2″ pivoting corner key into radius portion of CBMC. For spliced applications pull the 6” pivoting corner key apart to make two separate keys. Insert one half of the key in the radius portion of the CBMC. Slide jamb portion of CBMC into key ensuring the miter joint is snug. Drill pilot holes with 7/64″ drill bit using the line on the CBMC as a guide 1 1/4″ (32) from the edges of the casing and countersink with a countersink bit. Secure radius portions of the CBMC to the keys with the #7 x 5/8″ flathead screws provided. Remove jamb CBMC components from frame kerf. (Do not attach the key to the jamb CBMC portion at this time.) See illustration 17.

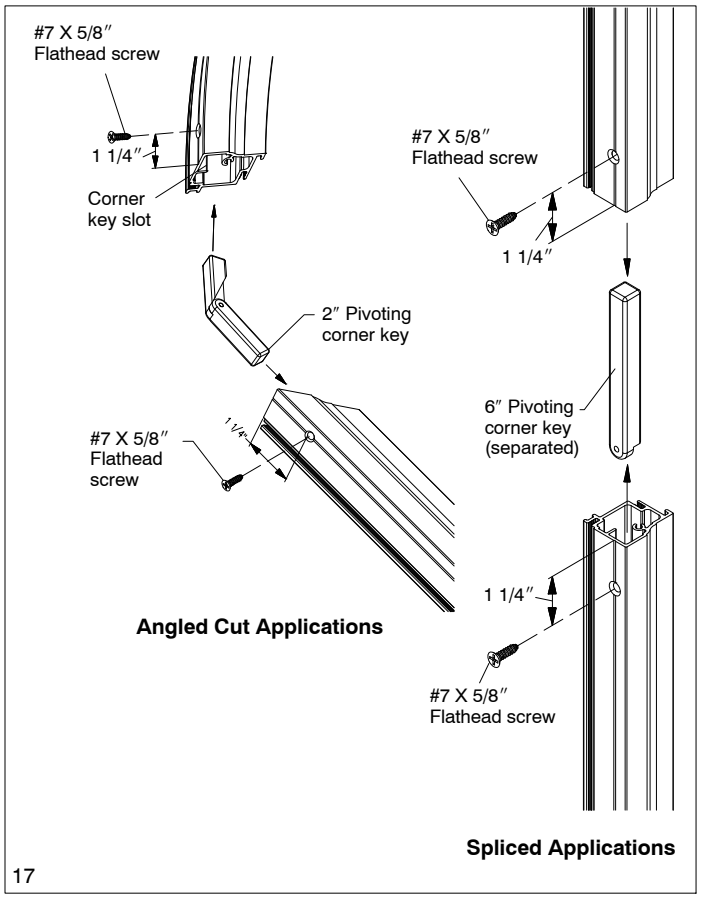

20. Place the subsill into sill kerf, ensuring subsill extends past the jambs an equal distance on each side. Secure with #8 x 5/8″ self tapping panhead screws every 6 – 8″ (152–203). See illustration 18.

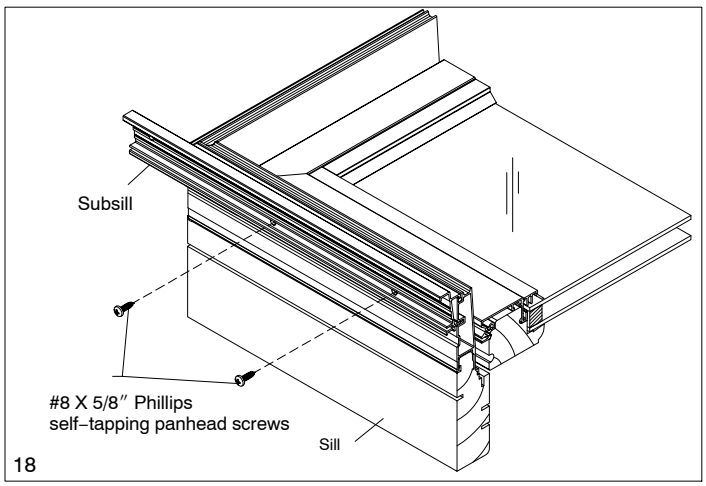

21. Apply silicone sealant at the point where the subsill and jamb meet and continue under the sill running a bead the full length of the sill. See illustration 19. For door products apply silicone sealant from the top edge of the jamb cladding at the sill to beyond the jamb accessory kerf as shown in illustration 20. If applying continuous CBMC skip to step 21.

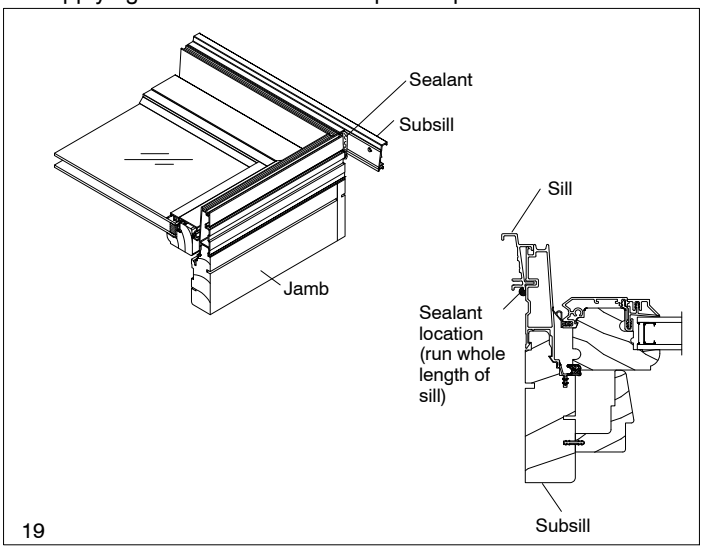

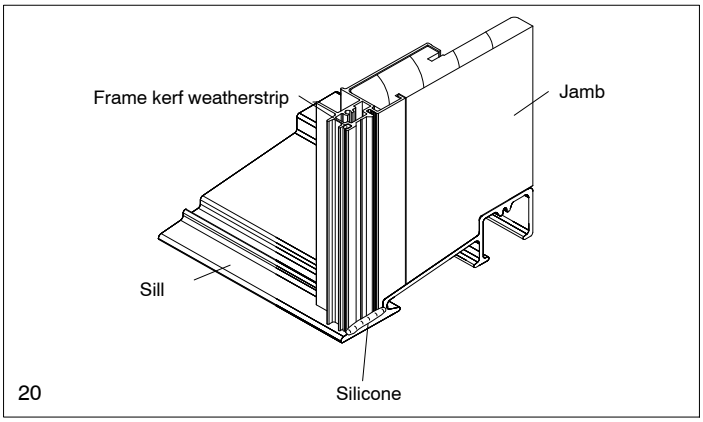

22. Next apply the V087 connecting barb to the jamb of the unit. See illustration 21.

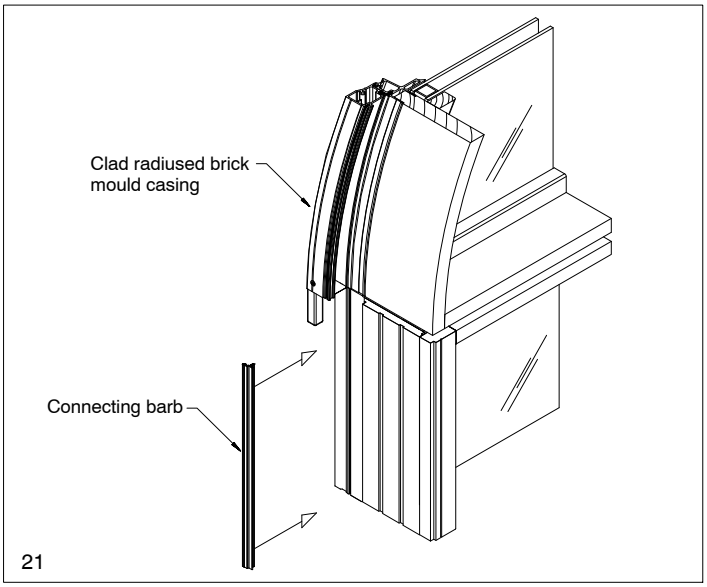

23. Slide jamb CBMC onto pivoting corner key ensuring joint is tight. Press jamb CBMC into connecting barb and kerf by hand then secure firmly with a rubber mallet. **Again use caution if binding occurs as damage may result to the frame and brick mould casing.** Secure pivoting corner keys to the jamb CBMC with #7 x 5/8″ flathead screws provided. See illustration 22. For continuous CBMC, align radius portion on index marks and attach as described above.

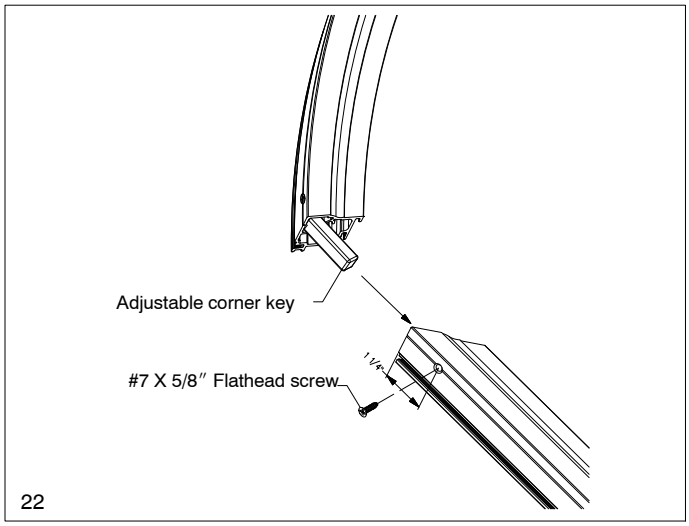

22

24. For door products skip this step and proceed to Step 20. Attach subsill to jamb CBMC with #8 x 1 1/2″ flat head screw as shown in illustration 23.

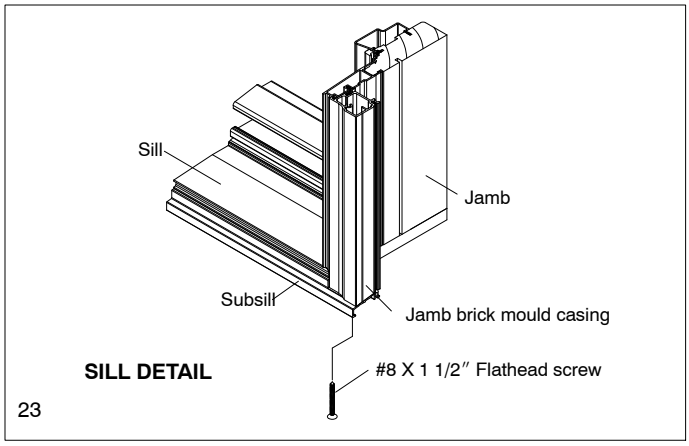

23

APPLYING NAILING FIN

25. Apply radius nailing fin to radius portion of round top. Apply straight length of nailing fin to jambs and sill where applicable. See illustration 24.

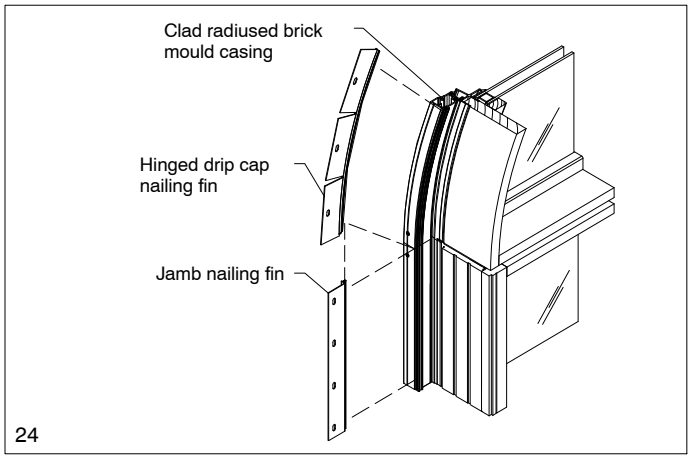

24

APPLYING SEALANT

26. Apply silicone caulking on the backside of the unit at joints before installing in the dwelling as shown in illustrations 25 and 26.

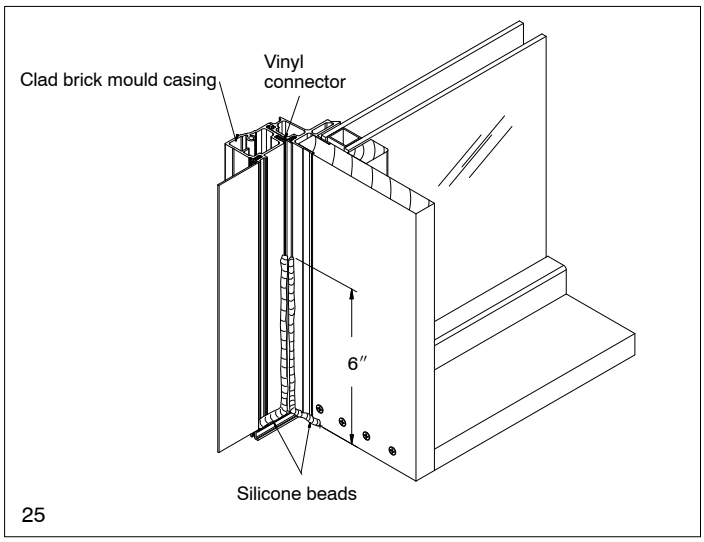

25

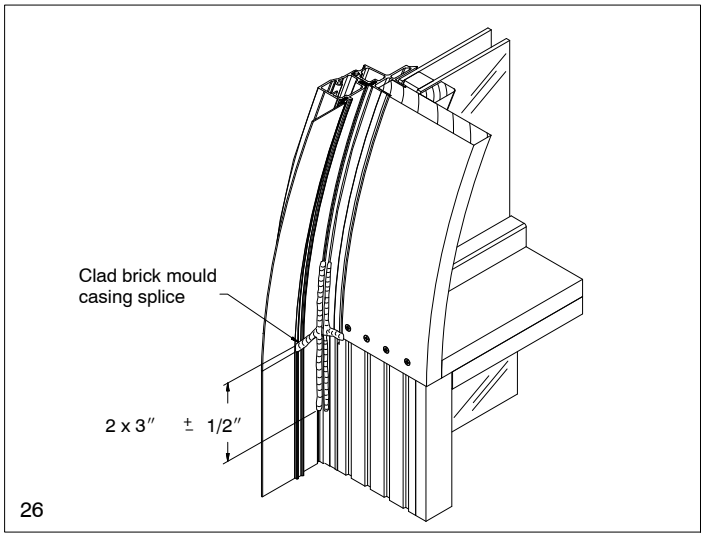

26

27. Be sure to tool out the caulking for the best performance as shown in illustration 27.

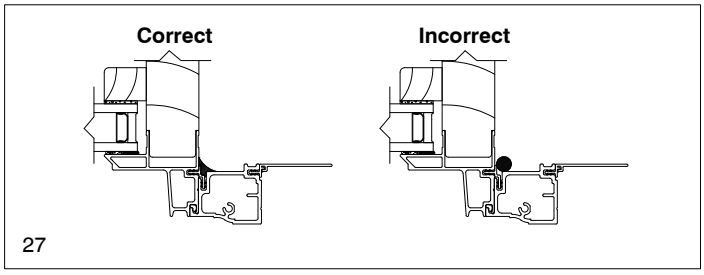

27