CHAPTER 10A

INTEGRITY ALL ULTREX CASEMENT/AWNING

Unit Features 10A.2
Certified Sizes and Rating 10A.3
Egress, Lite and Vent Measurements / Egress Formula 10A.6
Sizing Guidelines / Measurement Conversions 10A.7
Elevations – Casement 10A.8
Elevations – Awning/Transom 10A.9
Elevations – Picture 10A.10
Section Details – Operating 10A.11
Section Details – Transom / Picture 10A.12
Section Details – Mullions 10A.13
GBG Lite Cuts 10A.14
Installation Suggestions 10A.15

ATTENTION:

- Specifications and technical data are subject to change without notice.
- Dimensions in parenthesis are in millimeters or square meters
- Allow 1/16″ (2) tolerance on all measurements.
- For answers to technical questions about Integrity products you may call our Integrity Support Line: 1–800–587–2712.
- Website: www.integritywindows.com

ALL ULTREX CASEMENT/AWNING

UNIT FEATURES

FRAME AND SASH:

The frame and sash exteriors are made of Ultrex®, an advanced fiber reinforced material that is resistant to thermal conductance. Ultrex patented coating system meets all the requirements of AAMA 624-10. Exterior colors: Stone White, Pebble Gray, Bronze, Evergreen, Cashmere, or Ebony. The interior coating meets all the requirements of 00022716 in Stone White.

FRAME:

Composite frame thickness is 1 1/2″ (38). Total frame depth is 3 3/32″ (79). Ultrex is 0.070″ – 0.077″ (2) thick.

SASH:

Composite sash thickness is 15/16″ (24). Ultrex is 0.070″ – 0.077″ (2) thick. Sashes can be replaced but not reglazed.

JAMB EXTENSION:

Standard jamb depth is 2″ (51). 4 9/16″ (116) and 6 9/16″ (167) maintenance free jamb extension available.

HARDWARE (CASEMENT):

Standard Casement hardware includes top and bottom hinges. The hinge track is stainless steel with an injected molded hinge shoe. The hinge arm is coated with E–Gard. A snubber on the jamb and stile, certain heights have 0, 1 or 2 sets, interlock the sash to the frame on the hinge side. The locking hardware consists of a multi–point locking mechanism that is actuated from a single point of operation. The roto operator is Zinc die cast with an E–Gard coating. The hardware finish options are: Stone White, Almond Frost, Brass, Satin Nickel and Oil Rubbed Bronze. Optional factory applied Window Opening Control Device is available (min size: 18 9/16” (471) x 23 1/2” (597) – max size 35 1/2” (902) x 71 1/2” (1816). This device works in accordance to ASTM 2090–10 standard specification for window fall prevention devices with emergency escape. Available in almond frost and white finishes. Optional coastal hardware is available.

HARDWARE (AWNING):

Standard Awning hardware includes left and right hinges. The hinge track is stainless steel with an injected molded hinge shoe. The hinge arm is coated with E–Gard. A single point lock on each jamb/stile, and a roto operator. The hardware finish options are: Stone White, Almond Frost, Brass, Satin Nickel, and Oil Rubbed Bronze. Optional coastal hardware is available.

INSTALLATION:

Factory applied folding nailing fin. Optional installation brackets for masonry applications are available. Factory supplied field mull kits are available for standard assemblies.

GLAZING:

All units are manufactured with a 11/16″ (17) IG with LoĒ^2–272®, LoĒ^3–366® or LoĒ–180™ coatings including argon gas fill. Tempered glass and/or obscure glass are available as an option. All glass is of a select quality complying with ASTM C 1036. Insulating glass is manufactured and tested to pass level ASTM E 2190 and is IGCC certified. The glazing seal is a silicone bedding on both interior and exterior surfaces utilized in a sandwich style sash. STC/OITC values are available for 3.1/3.1 standard glass. Optional 3.1/4.7 STC/OITC Upgrade glass is available. STC and OITC ratings are tested in accordance with ASTM E 90-09. See the Product Performance chapter for values.

WEATHER STRIP:

The primary weather strip is a black extruded PVC foam filled bulb that attaches to all four sides of the frame. The secondary weather–strip is a black extruded PVC hollow that is attached to the sash.

INSECT SCREEN:

Charcoal color fiberglass screen cloth. Rolled form aluminum frame finish is Stone White. Features a bottom rail lift and top rail mounted springs that allow it to be removed from the interior of the unit.

GRILLES–BETWEEN–THE–GLASS:

11/16″ (17mm) contoured aluminum bar placed between two panes of glass. Patterns: Standard rectangular pattern or optional 9 lite Prairie cut. Exterior color will match exterior of sash color. The interior finish is always Stone White. GBGs are not available on Impact units.

ACCESSORIES:

Field applied j–channel, a 1” (25) or a 3” (76) frame expander, or flush fin installation kit. Factory applied: sheet rock return for 1/2” (13) or 5/8” (16) drywall, a 3/4” (19) receiver, a frame filler or a flush fin. General: mull kits are available for field assembly. Kits include instructions, mull covers, mull plugs and brackets.

EXTERIOR CASING:

Non–integral to the unit. Fastened to the exterior wall with barb and kerf 2” brick mould as a full surround or with sill nosing. 3 ½” flat casing available as full surround or with sill nosing. Also available with 1” ranch style sill and header overhang.

NOTE: NFRC Values are now located on www.integritywindows.com

ALL ULTREX CASEMENT/AWNING

Integrity All Ultrex Swinging Window Picture									
Standard Sizes and WDMA Ratings									
Nominal Height	Frame Height, in	Nominal Width							
		Frame Width, inches							
		16	20	26	30	36	40	50	60
		17.5	23.5	29.5	35.5	41.5	47.5	59.5	71.5
20	23.5	FW – LC40	FW – LC40	FW – LC40	FW – LC40	FW – LC40	FW – LC40	FW – LC40	FW – LC40
26	29.5	FW – LC40	FW – LC40	FW – LC40	FW – LC40	FW – LC40	FW – LC40	FW – LC40	FW – LC40
30	35.5	FW – LC40	FW – LC40	FW – LC40	FW – LC40	FW – LC40	FW – LC40	FW – LC40	FW – LC40
36	41.5	FW – LC40	FW – LC40	FW – LC40	FW – LC40	FW – LC40	FW – LC40	FW – LC40	FW – LC40
40	47.5	FW – LC40	FW – LC40	FW – LC40	FW – LC40	FW – LC40	FW – LC40	FW – LC40	FW – LC40
46	53.5	FW – LC40	FW – LC40	FW – LC40	FW – LC40	FW – LC40	FW – LC40	FW – LC40	FW – LC40
50	59.5	FW – LC40	FW – LC40	FW – LC40	FW – LC40	FW – LC40	FW – LC40	FW – LC40	FW – LC40
56	65.5	FW – LC40	FW – LC40	FW – LC40	FW – LC40	FW – LC40	FW – LC40	FW – LC40	FW – LC40
60	71.5	FW – LC40	FW – LC40	FW – LC40	FW – LC40	FW – LC40	FW – LC40	FW – LC40	FW – LC40

Integrity All Ultrex Swinging Window Transom									
Standard Sizes and WDMA Ratings									
Nominal Height	Frame Height, in	Nominal Width							
		Frame Width, inches							
		16	20	26	30	36	40	50	60
		17.5	23.5	29.5	35.5	41.5	47.5	59.5	71.5
10	11.5	FW – LC40	FW – LC40	FW – LC40	FW – LC40	FW – LC40	FW – LC40	FW – LC40	FW – LC40
16	17.5	FW – LC40	FW – LC40	FW – LC40	FW – LC40	FW – LC40	FW – LC40	FW – LC40	FW – LC40
20	23.5	FW – LC40	FW – LC40	FW – LC40	FW – LC40	FW – LC40	FW – LC40	FW – LC40	FW – LC40

Integrity All Ultrex Awning							
Standard Sizes and WDMA Ratings							
Nominal Height	Frame Height, in	Nominal Width					
		Frame Width, inches					
		16	20	26	30	36	40
		17.5	23.5	29.5	35.5	41.5	47.5
16	17.5	AP–LC40	AP–LC40	AP–LC40	AP–LC40	AP–LC40	AP–LC40
20	23.5	AP–LC40	AP–LC40	AP–LC40	AP–LC40	AP–LC40	AP–LC40
26	29.5	AP–LC40	AP–LC40	AP–LC40	AP–LC40	AP–LC40	AP–LC40
30	35.5	AP–LC40	AP–LC40	AP–LC40	AP–LC40	AP–LC40	AP–LC40

ALL ULTREX CASEMENT/AWNING

Certified Sizes and Rating

Integrity All Ultrex Casement					
Standard Sizes and WDMA Ratings					
Nominal Height	Frame Height, in	**Nominal Width**			
		Frame Width, inches			
		16	**20**	**26**	**30**
		17.5	23.5	29.5	35.5
20	23.5	C–LC40	C–LC40	C–LC40	C–LC40
26	29.5	C–LC40	C–LC40	C–LC40	C–LC40
30	35.5	C–LC40	C–LC40	C–LC40	C–LC40
36	41.5	C–LC40	C–LC40	C–LC40	C–LC40
40	47.5	C–LC40	C–LC40	C–LC40	C–LC40
46	53.5	C–LC40	C–LC40	C–LC40	C–LC40
50	59.5	C–LC40	C–LC40	C–LC40	C–LC40
56	65.5	C–LC40	C–LC40	C–LC40	C–LC40
60	71.5	C–LC40	C–LC40	C–LC40	C–LC40

EGRESS LITE AND VENT MEASUREMENTS

EGRESS, LITE, AND VENT MEASUREMENTS						
Call #	Clear Opening (sq. ft)	Clear Opening Width	Clear Opening Height	Floor to Sill Height	Vent Opening (sq. ft)	Daylight Opening (sq. ft)
ALL ULTREX CASEMENT OPERATOR						
IFCA 1620	1.10	8.67	18.32	61.00	1.10	1.46
1626	1.46	8.67	24.32	55.00	1.46	1.96
1630	1.83	8.67	30.32	49.00	1.83	2.45
1636	2.19	8.67	36.32	43.00	2.19	2.94
1640	2.55	8.67	42.32	37.00	2.55	3.43
1646	2.91	8.67	48.32	31.00	2.91	3.93
1650	3.27	8.67	54.32	25.00	3.27	4.42
1656	3.63	8.67	60.32	19.00	3.63	4.91
1660T	3.99	8.67	66.32	13.00	3.99	5.40
2020	1.87	14.67	18.32	61.00	1.87	2.21
2026	2.48	14.67	24.32	55.00	2.48	2.95
2030	3.09	14.67	30.32	49.00	3.09	3.69
2036	3.70	14.67	36.32	43.00	3.70	4.43
2040	4.31	14.67	42.32	37.00	4.31	5.18
2046	4.92	14.67	48.32	31.00	4.92	5.92
2050	5.53	14.67	54.32	25.00	5.53	6.66
2056	6.15	14.67	60.32	19.00	6.15	7.40
2060T	6.76	14.67	66.32	13.00	6.76	8.15
*2620	2.63	20.67	18.32	61.00	2.63	2.95
*2626	3.49	20.67	24.32	55.00	3.49	3.94
*2630	4.35	20.67	30.32	49.00	4.35	4.93
*2636	5.21	20.67	36.32	43.00	5.21	5.93
*2640E	6.07	20.67	42.32	37.00	6.07	6.92
*2646E	6.94	20.67	48.32	31.00	6.94	7.91
*2650E	7.80	20.67	54.32	25.00	7.80	8.90
*2656E	8.66	20.67	60.32	19.00	8.66	9.90
*2660TE	9.52	20.67	66.32	13.00	9.52	10.89
*3020	3.39	26.67	18.32	61.00	3.39	3.69
*3026	4.50	26.67	24.32	55.00	4.50	4.93
*3030	5.62	26.67	30.32	49.00	5.62	6.18
*3036E	6.73	26.67	36.32	43.00	6.73	7.42
*3040E	7.84	26.67	42.32	37.00	7.84	8.66
*3046E	8.95	26.67	48.32	31.00	8.95	9.90
*3050E	10.06	26.67	54.32	25.00	10.06	11.15
*3056E	11.17	26.67	60.32	19.00	11.17	12.39
*3060TE	12.28	26.67	66.32	13.00	12.28	13.63

EGRESS MEASUREMENTS FOR OPERATING CASEMENTS

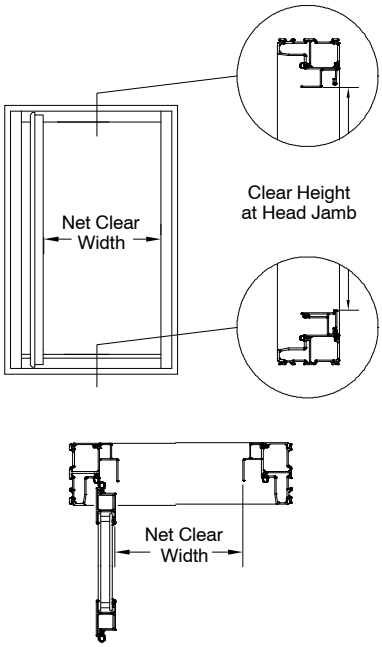

Code restrictions may vary depending on your local building codes.
For additional information contact your local code department for IBC and IRC requirements.

CASEMENT EGRESS CALCULATIONS FOR CUSTOM SIZE UNITS	
DESIRED DIMENSION	FORMULA
Egress opening width (inches)	= Frame OM width –8.827
Egress opening height (inches)	= Frame OM height –5.184
Egress opening area (SF)	= (Egress width x egress height)/144

NOTES:

Call numbers with an E meet the National Egress Codes requiring 5.7 SF clear opening. 20″ clear width and 24″ clear height, not to excess a floor to sill height of 44. Code restrictions may vary depending on local building codes.

T= Tempered glass is standard for this size unit.

Floor to sill height is based on a rough opening height of 6′ 10 1/2″.

These units (*) may optionally include a window opening control device tested to ASTM F 2090–10, which can be released from the inside without the use of a key, tool, special knowledge, or force greater than that required for normal unit operation. This device is designed to stop your window at a specified location. This device is not designed to prevent child falls.

Units with a frame size of 18 9/16″ x 23 1/2″ – 35 1/2″ x 71 1/2″ can have an optional “window opening control device” installed at the factory. This device is designed to meet the ASTM F 2090–10 standard specification for window fall prevention device.

ALL ULTREX CASEMENT/AWNING

EGRESS. LITE, AND VENT MEASUREMENTS

LITE AND VENT MEASUREMENTS								
Call #	Vent Opening (SF)	Daylight Opening (SF)	Unit #	Vent Opening (SF)	Daylight Opening (SF)	Unit #	Vent Opening (SF)	Daylight Opening (SF)
ALL ULTREX AWNING								
IFAWN 1616	0.74	0.97	IFAWN 2616	1.77	1.96	IFAWN 3616	2.79	2.94
1620	1.10	1.46	2620	2.63	2.95	3620	4.16	4.43
1626	1.46	1.96	2626	3.49	3.94	3626	5.52	5.93
1630	1.83	2.45	2630	4.35	4.93	3630	6.88	7.42
2016	1.25	1.46	3016	2.28	2.45	4016	3.31	3.43
2020	1.87	2.21	3020	3.39	3.69	4020	4.92	5.18
2026	2.48	2.95	3026	4.50	4.93	4026	6.53	6.92
2030	3.09	3.69	3030	5.62	6.18	4030	8.14	8.66
ALL ULTREX SWINGING WINDOW PICTURE, TRANSOM AND CASEMENT/AWNING STATIONARY								
Call #	Daylight Opening (SF)	Call #	Daylight Opening (SF)	Call #	Daylight Opening (SF)	Call #	Daylight Opening (SF)	
IFSWP 1610	0.48	IFSWP 2610	0.96	IFSWP 3610	1.45	IFSWP 5010	2.18	
1616	0.97	2616	1.96	3616	2.94	5016	4.42	
1620	1.46	2620	2.95	3620	4.43	5020	6.66	
1626	1.96	2626	3.94	3626	5.93	5026	8.90	
1630	2.45	2630	4.93	3630	7.42	5030	11.15	
1636	2.94	2636	5.93	3636	8.91	5036	13.39	
1640	3.43	2640	6.92	3640	10.40	5040	15.63	
1646	3.93	2646	7.91	3646	11.90	5046	17.87	
1650	4.42	2650	8.90	3650	13.39	5050	20.12	
1656	4.91	2656	9.90	3656	14.88	5056	22.36	
1660T	5.40	2660T	10.89	3660T	16.37	5060T	24.60	
2010	0.72	3010	1.21	4010	1.69	6010	2.66	
2016	1.46	3016	2.45	4016	3.43	6016	5.40	
2020	2.21	3020	3.69	4020	5.18	6020	8.15	
2026	2.95	3026	4.93	4026	6.92	6026	10.89	
2030	3.69	3030	6.18	4030	8.66	6030	13.63	
2036	4.43	3036	7.42	4036	10.40	6036	16.37	
2040	5.18	3040	8.66	4040	12.15	6040	19.12	
2046	5.92	3046	9.90	4046	13.89	6046	21.86	
2050	6.66	3050	11.15	4050	15.63	6050	24.60	
2056	7.40	3056	12.39	4056	17.37	6056	27.34	
2060T	8.15	3060T	13.63	4060T	19.12	6060T	30.09	

T= Tempered glass is standard for this size unit.

FORMULA TO CALCULATE UNIT DAYLIGHT OPENING FOR TRANSOM OR PICTURE:

R.O. Width – 5 7/16″ (138) = Daylight Opening Width

R.O. Height – 5 7/16″ (138) = Daylight Opening Height

ALL ULTREX CASEMENT/AWNING

SIZING GUIDELINES AND MEASUREMENT CONVERSIONS

MULTIPLE ASSEMBLIES – Factory Mull Configuration.
Field mull kits are available. Mulling beyond limitations is not recommended.
MAXIMUM ROUGH OPENING ASSEMBLY UP TO 6W1H: 114″ (2896mm) X 78″ (1981mm)
MAXIMUM ROUGH OPENING ASSEMBLY UP TO 5W5H : 96″ (2438mm) X 96″ (2438mm)

CALCULATING TOTAL ROUGH OPENING FOR ASSEMBLIES

WIDTH: ADD Frame Widths + 1/2″ (13 mm) per mull + 1/2″ (13 mm).
Tolerance = 1/4″ (6 mm) from frame to Rough Opening at left and right jamb.
HEIGHT: ADD Frame Heights + 1/2″ (13 mm) per mull + 1/2″ (13 mm).
Tolerance = 1/2″ (13 mm) from Frame to Rough Opening at head jamb.

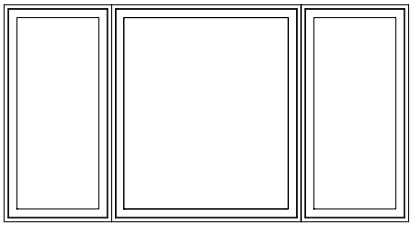

2 vertical mulls

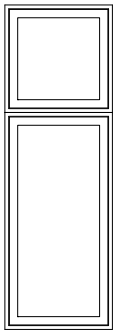

1 horizontal mull

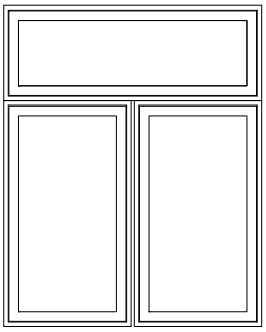

1 vertical mull
1 horizontal mull

MEASUREMENT CONVERSION FACTORS				
Unit	**WIDTH**		**HEIGHT**	
Frame Measurements	**Imperial**	**Metric**	**Imperial**	**Metric**
Masonry Opening Rough Opening	+.000″	+ 0	+.250″	+ 6
OM of Frame to Rough Opening	+.500″	+ 13	+.500″	+ 13
Glass Size to Rough Opening	+5.066″	+ 129	+5.066″	+ 129
Sash Opening to Rough Opening	+2.164″	+ 55	+2.164″	+ 55
Sash				
Glass Size to Sash Opening	+2.902″	+ 74	+2.902″	+ 74
Glass Size to OM of Sash	+2.590″	+ 66	+2.590″	+ 66
OM of Sash ot Rough Opening	+2.476″	+ 63	+2.476″	+ 63
Glass Size to Daylight Opening	–1.112″	– 28	–1.112″	– 28
Rough Opening to Daylight Opening	–6.178″	– 157	–6.178″	– 157
Screen				
Rough Opening to OM of Screen	–4.762″	– 121	–5.169″	– 131
Glass Size to OM of Screen	+.304″	+ 8	–.103″	– 3
Daylight Opening to OM of Screen	+1.416″	+ 36	+1.009″	+ 26

ALL ULTREX CASEMENT/AWNING

ELEVATIONS – ALL ULTREX CASEMENT UNITS Not To Scale

Mas. Opg.	1–6 (457)	2–0 (610)	2–6 (762)	3–0 (914)
Rgh. Opg.	1–6 (457)	2–0 (610)	2–6 (762)	3–0 (914)
Frame Size	1–5 1/2 (445)	1–11 1/2 (597)	2–5 1/2 (749)	2–11 1/2 (902)

1–11 3/4 (603) 2–0 (610) 1–11 1/2 (597)	IFCA1620	IFCA2020	IFCA2620	IFCA3020
2–5 3/4 (756) 2–6 (762) 2–5 1/2 (749)	IFCA1626	IFCA2026	IFCA2626	IFCA3026
2–11 3/4 (908) 3–0 (914) 2–11 1/2 (902)	IFCA1630	IFCA2030	IFCA2630	IFCA3030
3–5 3/4 (1060) 3–6 (1067) 3–5 1/2 (1054)	IFCA1636	IFCA2036	IFCA2636	IFCA3036E
3–11 3/4 (1213) 4–0 (1219) 3–11 1/2 (1207)	IFCA1640	IFCA2040	IFCA2640E	IFCA3040E
4–5 3/4 (1365) 4–6 (1372) 4–5 1/2 (1359)	IFCA1646	IFCA2046	IFCA2646E	IFCA3046E
4–11 3/4 (1518) 5–0 (1524) 4–11 1/2 (1511)	IFCA1650	IFCA2050	IFCA2650E	IFCA3050E
5–5 3/4 (1670) 5–6 (1676) 5–5 1/2 (1664)	IFCA1656	IFCA2056	IFCA2656E	IFCA3056E
5–11 3/4 (1822) 6–0 (1829) 5–11 1/2 (1816) Mas. Opg. Rgh. Opg. Frame Size	IFCA1660T	IFCA2060T	IFCA2660TE	IFCA3060TE

NOTE:
E=These windows meet National Egress Codes for fire evacuation. Local codes may differ.

T=Tempered glass is standard for this size.

Standard GBGs patterns shown in above units.
Optional: Customer specified equal lite cut patterns are available. Units are available with or without GBGs.

Imperial and metric dimensions are shown. Metric dimensions are in millimeters.

All units viewed from exterior.

ALL ULTREX CASEMENT/AWNING

ELEVATIONS – ALL ULTREX AWNING AND TRANSOM UNITS Not To Scale

AWNING

Mas. Opg.	1–6 (457)	2–0 (610)	2–6 (762)	3–0 (914)	3–6 (1067)	4–0 (1219)
Rgh. Opg.	1–6 (457)	2–0 (610)	2–6 (762)	3–0 (914)	3–6 (1067)	4–0 (1219)
Frame Size	1–5 1/2 (445)	1–11 1/2 (597)	2–5 1/2 (749)	2–11 1/2 (902)	3–5 1/2 (1054)	3–11 1/2 (1207)

Mas. Opg. / Rgh. Opg. / Frame Size						
1–5 3/4 (451) / 1–6 (457) / 1–5 1/2 (445)	IFAWN1616	IFAWN2016	IFAWN2616	IFAWN3016	IFAWN3616	IFAWN4016
1–11 3/4 (603) / 2–0 (610) / 1–11 1/2 (597)	IFAWN1620	IFAWN2020	IFAWN2620	IFAWN3020	IFAWN3620	IFAWN4020
2–5 3/4 (756) / 2–6 (762) / 2–5 1/2 (749)	IFAWN1626	IFAWN2026	IFAWN2626	IFAWN3026	IFAWN3626	IFAWN4026
2–11 3/4 (908) / 3–0 (914) / 2–11 1/2 (902)	IFAWN1630	IFAWN2030	IFAWN2630	IFAWN3030	IFAWN3630	IFAWN4030

TRANSOM

Mas. Opg.	1–6 (457)	2–0 (610)	2–6 (762)	3–0 (914)	3–6 (1067)	4–0 (1219)	5–0 (1524)	6–0 (1829)
Rgh. Opg.	1–6 (457)	2–0 (610)	2–6 (762)	3–0 (914)	3–6 (1067)	4–0 (1219)	5–0 (1524)	6–0 (1829)
Frame Size	1–5 1/2 (445)	1–11 1/2 (597)	2–5 1/2 (749)	2–11 1/2 (902)	3–5 1/2 (1054)	3–11 1/2 (1207)	4–11 1/2 (1511)	5–11 1/2 (1816)

Mas. Opg. / Rgh. Opg. / Frame Size								
11 3/4 (298) / 1–0 (305) / 11 1/2 (292)	IFSWT1610	IFSWT2010	IFSWT2610	IFSWT3010	IFSWT3610	IFSWT4010	IFSWT5010	IFSWT6010
1–5 3/4 (451) / 1–6 (457) / 1–5 1/2 (445)	IFSWT1616	IFSWT2016	IFSWT2616	IFSWT3016	IFSWT3616	IFSWT4016	IFSWT5016	IFSWT6016
1–11 3/4 (603) / 2–0 (610) / 1–11 1/2 (597)	IFSWT1620	IFSWT2020	IFSWT2620	IFSWT3020	IFSWT3620	IFSWT4020	IFSWT5020	IFSWT6020

NOTE:

T=Tempered glass is standard for this size.

Standard GBGs patterns shown in above units. Optional: Customer specified equal lite cut patterns are available. Units are available with or without GBGs.

Imperial and metric dimensions are shown. Metric dimensions are in millimeters.

All units viewed from exterior.

ALL ULTREX CASEMENT/AWNING

ELEVATIONS – ALL ULTREX PICTURE UNITS Not To Scale

Mas. Opg.	1–6	(457)	2–0	(610)	2–6	(762)	3–0	(914)	3–6	(1067)	4–0	(1219)	5–0	(1524)	6–0	(1829)
Rgh. Opg.	1–6	(457)	2–0	(610)	2–6	(762)	3–0	(914)	3–6	(1067)	4–0	(1219)	5–0	(1524)	6–0	(1829)
Frame Size	1–5 1/2	(445)	1–11 1/2	(597)	2–5 1/2	(749)	2–11 1/2	(902)	3–5 1/2	(1054)	3–11 1/2	(1207)	4–11 1/2	(1511)	5–11 1/2	(1816)

Frame Size								
1–11 3/4 (603) / 2–0 (610) / 1–11 1/2 (597)	IFSWP1620	IFSWP2020	IFSWP2620	IFSWP3020	IFSWP3620	IFSWP4020	IFSWP5020	IFSWP6020
2–5 3/4 (756) / 2–6 (762) / 2–5 1/2 (749)	IFSWP1626	IFSWP2026	IFSWP2626	IFSWP3026	IFSWP3626	IFSWP4026	IFSWP5026	IFSWP6026
2–11 3/4 (908) / 3–0 (914) / 2–11 1/2 (902)	IFSWP1630	IFSWP2030	IFSWP2630	IFSWP3030	IFSWP3630	IFSWP4030	IFSWP5030	IFSWP6030
3–5 3/4 (1060) / 3–6 (1067) / 3–5 1/2 (1054)	IFSWP1636	IFSWP2036	IFSWP2636	IFSWP3036	IFSWP3636	IFSWP4036	IFSWP5036	IFSWP6036
3–11 3/4 (1213) / 4–0 (1219) / 3–11 1/2 (1207)	IFSWP1640	IFSWP2040	IFSWP2640	IFSWP3040	IFSWP3640	IFSWP4040	IFSWP5040	IFSWP6040
4–5 3/4 (1365) / 4–6 (1372) / 4–5 1/2 (1359)	IFSWP1646	IFSWP2046	IFSWP2646	IFSWP3046	IFSWP3646	IFSWP4046	IFSWP5046	IFSWP6046
4–11 3/4 (1518) / 5–0 (1524) / 4–11 1/2 (1511)	IFSWP1650	IFSWP2050	IFSWP2650	IFSWP3050	IFSWP3650	IFSWP4050	IFSWP5050	IFSWP6050
5–5 3/4 (1670) / 5–6 (1676) / 5–5 1/2 (1664)	IFSWP1656	IFSWP2056	IFSWP2656	IFSWP3056	IFSWP3656	IFSWP4056	IFSWP5056	IFSWP6056
5–11 3/4 (1822) / 6–0 (1829) / 5–11 1/2 (1816)	IFSWP1660T	IFSWP2060T	IFSWP2660T	IFSWP3060T	IFSWP3660T	IFSWP4060T	IFSWP5060T	IFSWP6060T

Mas. Opg.
Rgh. Opg.
Frame Size

ALL ULTREX CASEMENT/AWNING

SECTION DETAILS SCALE: 3″ = 1′0″

CASEMENT/AWNING

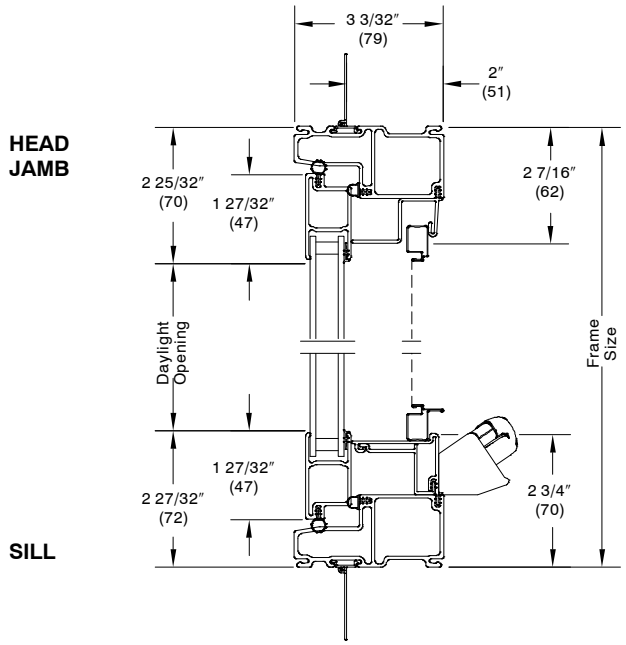

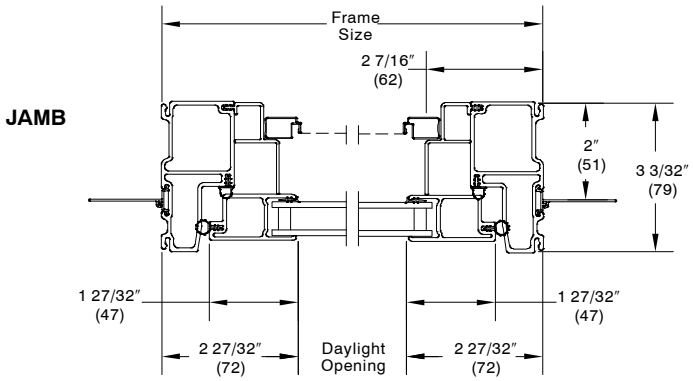

NOTE:Units also available with 4 9/16″ jamb. Same jamb extension profile as 6 9/16″ jamb extension shown.

CASEMENT/AWNING – 6 9/16″

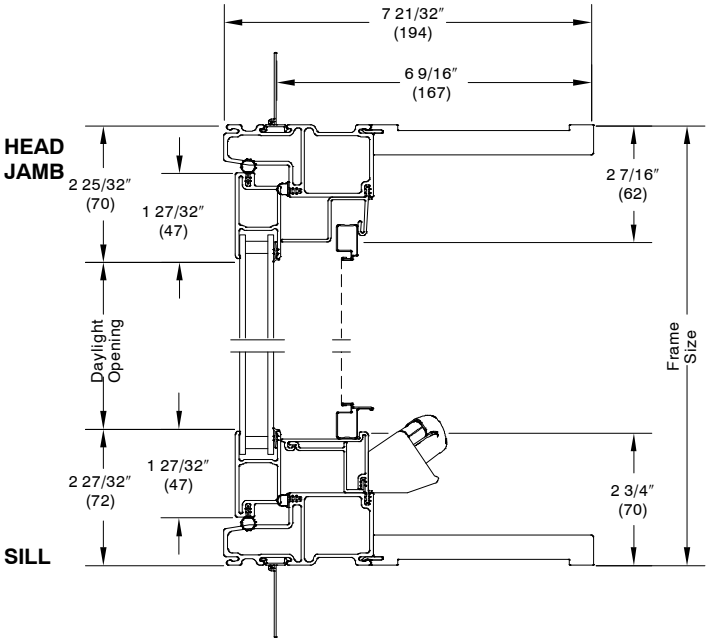

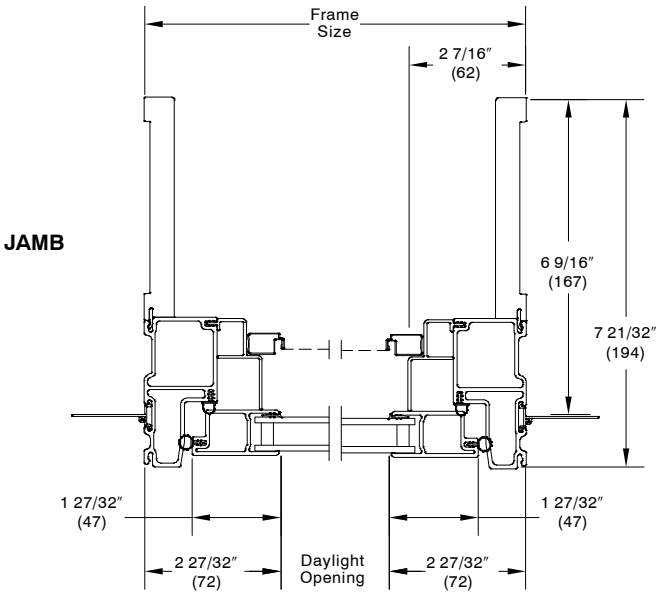

ALL ULTREX CASEMENT/AWNING

SECTION DETAILS SCALE: 3″ = 1′0″

TRANSOM/PICTURE

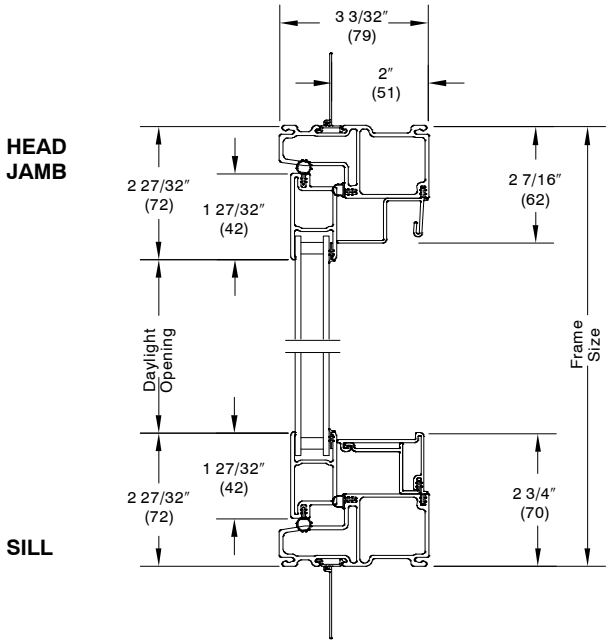

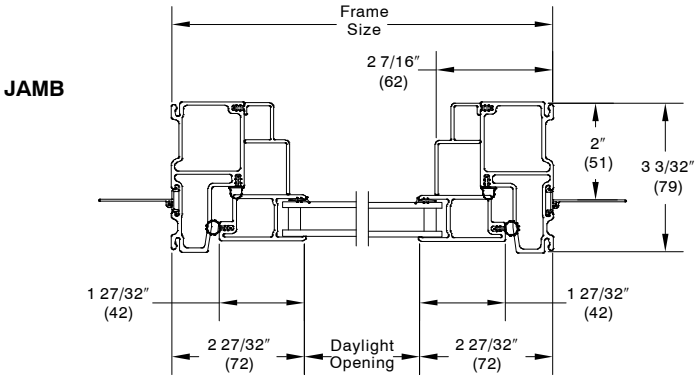

NOTE:Units also available with 4 9/16″ jamb. Same jamb extension profile as 6 9/16″ jamb extension shown.

TRANSOM/PICTURE – 6 9/16″

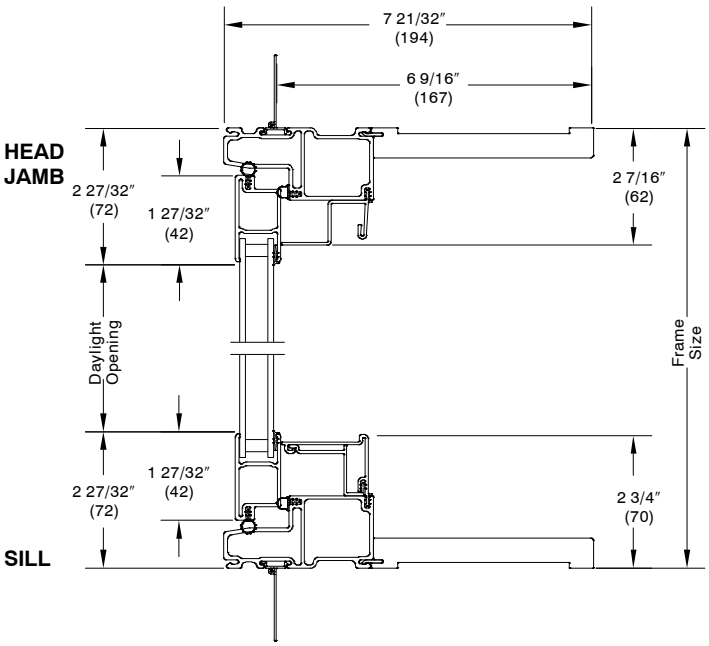

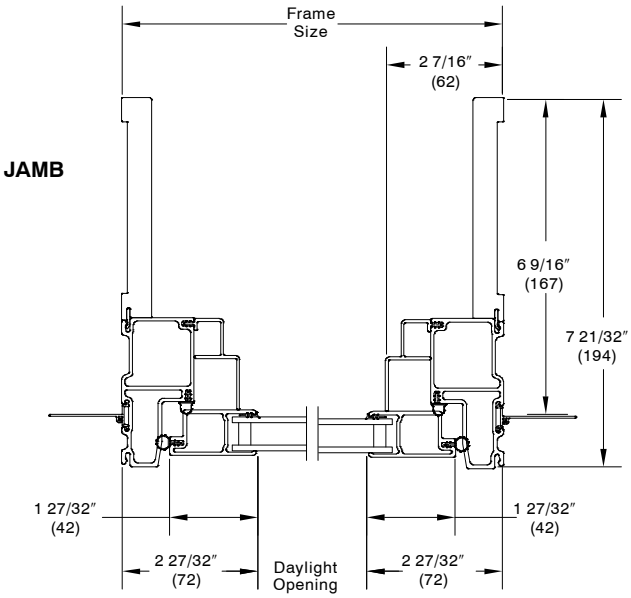

MULLIONS

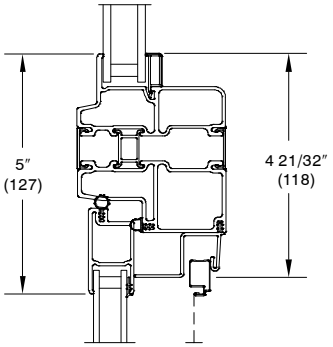

HORIZONTAL
IFDGP TO IFCA/IFAWN/IFSWT/IFSWP

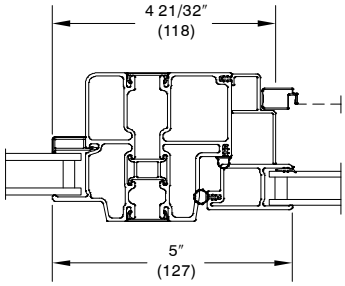

VERTICAL
IFDGP TO IFCA/IFAWN/IFSWT/IFSWP

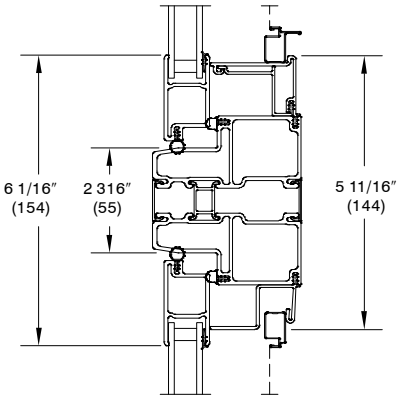

HORIZONTAL
IFCA/IFAWN/IFSWT/IFSWP TO
IFCA/IFAWN/IFSWT/IFSWP

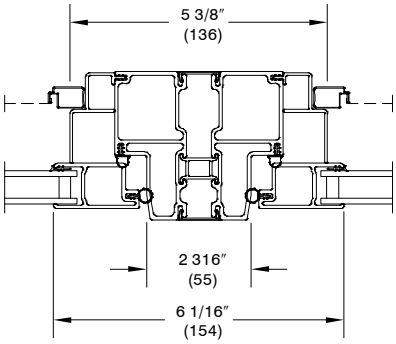

VERTICAL
IFCA/IFAWN/IFSWT/IFSWP TO
IFCA/IFAWN/IFSWT/IFSWP

DIVIDED LITE OPTIONS

ALUMINUM GRILLE BETWEEN GLASS

Equal GBG Lite Cuts for IFCA, IFAWN, IFSWP and IFSWT									
Nominal Height	Frame Height, inches	Nominal Width Frame Width, inches							
		16 17.5	**20** 23.5	**26** 29.5	**30** 35.5	**36** 41.5	**40** 47.5	**50** 59.5	**60** 71.5
10	11.5	2W1H	2W1H	3W1H	3W1H	4W1H	4W1H	5W1H	7W1H
16	17.5	2W1H	2W1H	3W1H	3W1H	4W1H	4W1H	5W1H	7W1H
20	23.5	2W2H	2W2H	3W2H	3W2H	4W2H	4W2H	5W2H	7W2H
26	29.5	2W2H	2W2H	3W2H	3W2H	4W2H	4W2H	5W2H	7W2H
30	35.5	2W2H	2W2H	3W2H	3W2H	4W2H	4W2H	5W2H	7W2H
36	41.5	2W3H	2W3H	3W3H	3W3H	4W3H	4W3H	5W3H	7W3H
40	47.5	2W3H	2W3H	3W3H	3W3H	4W3H	4W3H	5W3H	7W3H
46	53.5	2W4H	2W4H	3W4H	3W4H	4W4H	4W4H	5W4H	7W4H
50	59.5	2W4H	2W4H	3W4H	3W4H	4W4H	4W4H	5W4H	7W4H
56	65.5	2W5H	2W5H	3W5H	3W5H	4W5H	4W5H	5W5H	7W5H
60	71.5	2W5H	2W5H	3W5H	3W5H	4W5H	4W5H	5W5H	***

Prairie GBG Lite Cuts for IFCA, IFAWN, IFSWP and IFSWT									
Nominal Height	Frame Height, inches	Nominal Width Frame Width, inches							
		16 17.5	**20** 23.5	**26** 29.5	**30** 35.5	**36** 41.5	**40** 47.5	**50** 59.5	**60** 71.5
10	11.5	***	***	***	***	***	***	***	***
16	17.5	***	***	***	***	***	***	***	***
20	23.5	***	3W3H	3W3H	3W3H	3W3H	3W3H	3W3H	3W3H
26	29.5	***	3W3H	3W3H	3W3H	3W3H	3W3H	3W3H	3W3H
30	35.5	***	3W3H	3W3H	3W3H	3W3H	3W3H	3W3H	3W3H
36	41.5	***	3W3H	3W3H	3W3H	3W3H	3W3H	3W3H	3W3H
40	47.5	***	3W3H	3W3H	3W3H	3W3H	3W3H	3W3H	3W3H
46	53.5	***	3W3H	3W3H	3W3H	3W3H	3W3H	3W3H	3W3H
50	59.5	***	3W3H	3W3H	3W3H	3W3H	3W3H	3W3H	3W3H
56	65.5	***	3W3H	3W3H	3W3H	3W3H	3W3H	3W3H	3W3H
60	71.5	***	3W3H	3W3H	3W3H	3W3H	3W3H	3W3H	***

NOTES:

N/A – Call numbers not offered.
*** – GBG pattern not offered on these sizes.

ALL ULTREX CASEMENT/AWNING

INSTALLATION SUGGESTIONS Scale 3″ = 1′ 0″

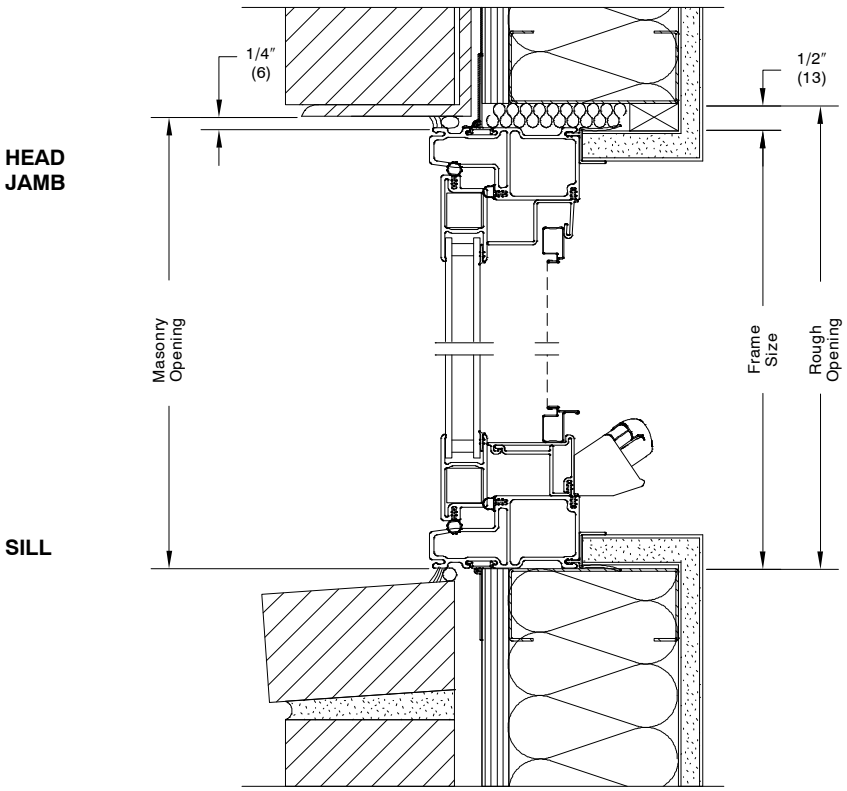

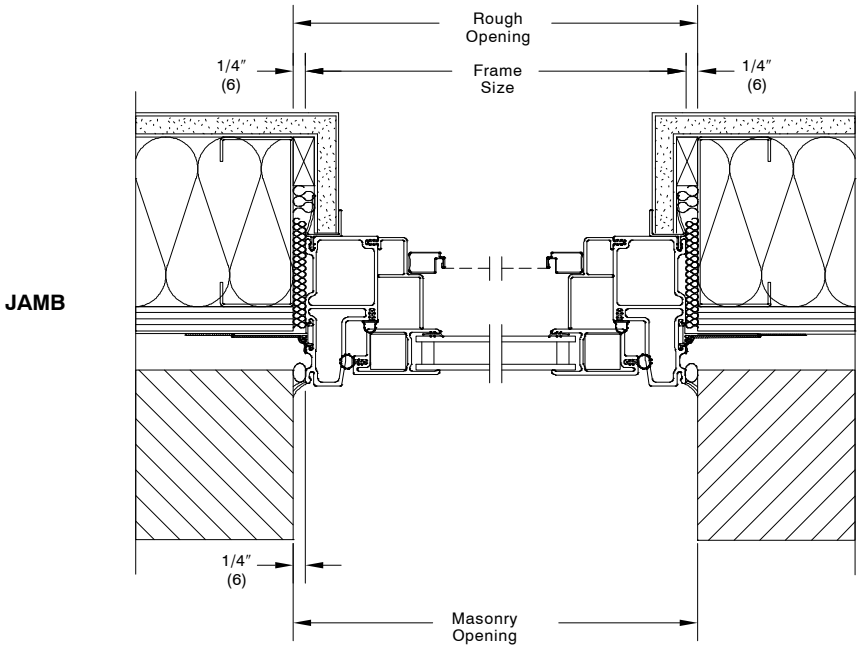

BRICK VENEER WITH STEEL FRAME CONSTRUCTION

NOTE:
Shown with optional sheetrock return.
Picture unit installation similar.
The above wall sections represent typical wall conditions, these details are not intended as installation instructions. Please refer to the installation instructions provided with the purchased units.

ALL ULTREX CASEMENT/AWNING

INSTALLATION SUGGESTIONS Scale 3″ = 1′ 0″

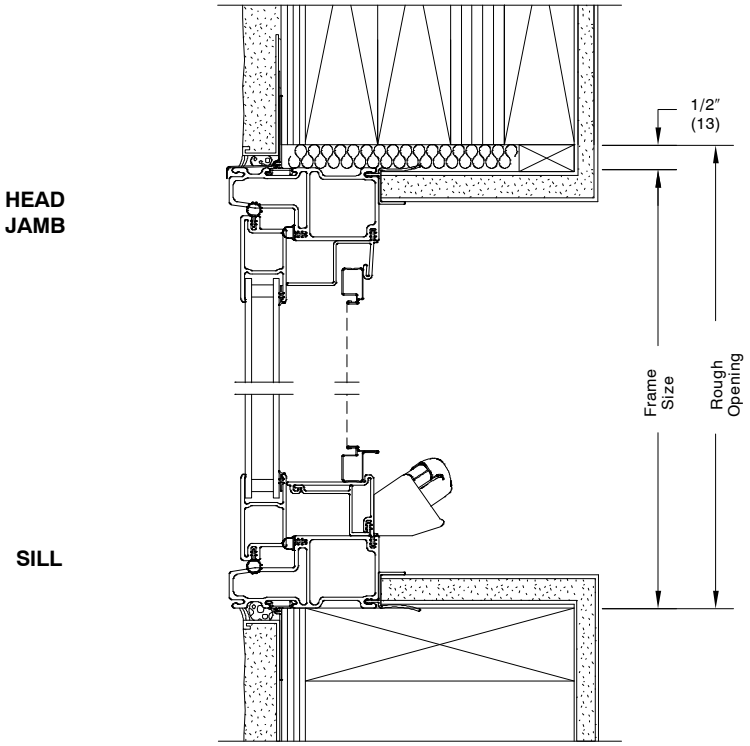

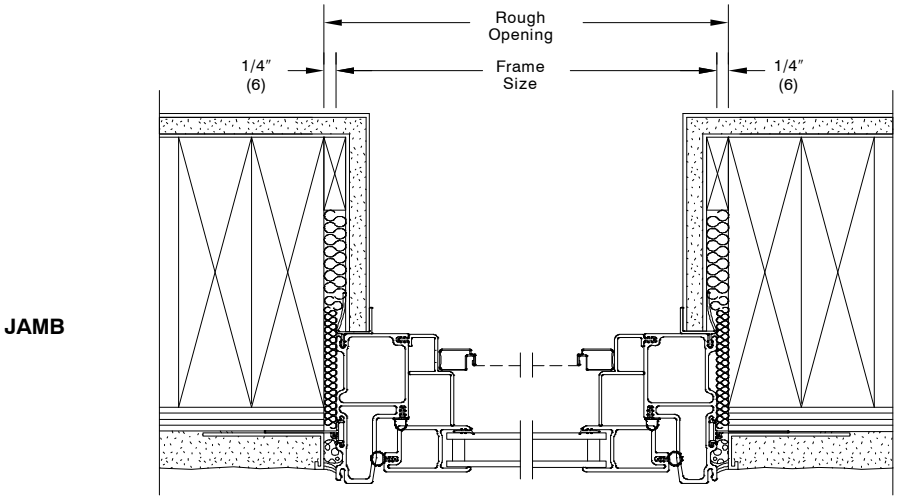

STUCCO SIDING WITH 2X6 FRAME CONSTRUCTION

NOTE:
Shown with optional sheetrock return.
Picture unit installation similar.
The above wall sections represent typical wall conditions, these details are not intended as installation instructions.
Please refer to the installation instructions provided with the purchased units.

ALL ULTREX CASEMENT/AWNING

INSTALLATION SUGGESTIONS Scale 3″ = 1′ 0″

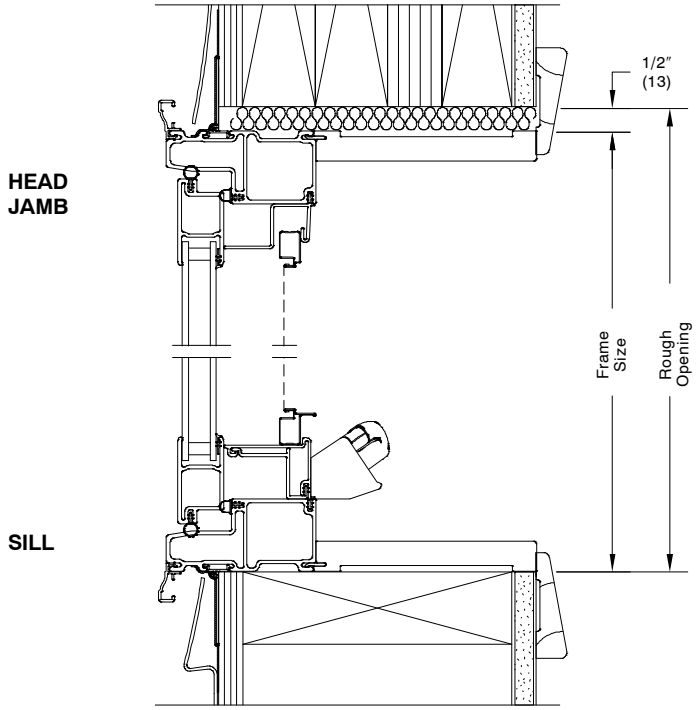

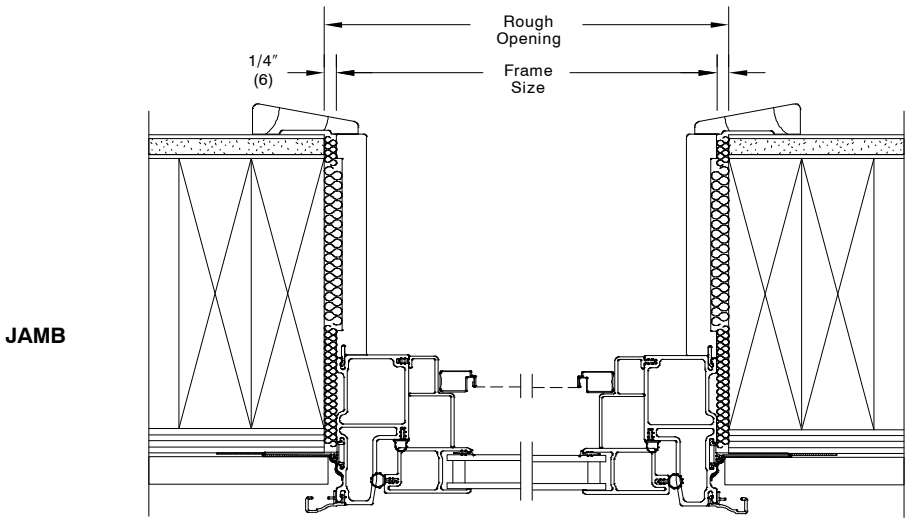

VINYL SIDING WITH 2X6 FRAME CONSTRUCTION

NOTE:
Shown with optional jamb extension and J–channels.
Picture unit installation similar.
The above wall sections represent typical wall conditions, these details are not intended as installation instructions.
Please refer to the installation instructions provided with the purchased units.