Cable Support System

Field Prep and Assembly Instructions – Field Service Guide

MARVIN Windows and Doors
Made for you.

Before You Begin

The Marvin Cable Support System is a convenient adjustment aid when leveling assemblies during installation and for post installation leveling of assemblies that require adjustment. The Cable Support System provides adjustable support for projecting window units when used in conjunction with platform boards, structural support members of the building and support brackets. With proper assembly and installation, the cable support system will help reduce the weight carried by the platforms. A maximum load of 500 pounds per pair of cables is allowed with additional support required for assemblies that exceed a 12″ projection.

CAUTION! Failure to assemble the cable support system per the following instructions may cause injury or poor product performance.

YOU WILL NEED TO SUPPLY

Safety glasses	Hammer
Stiff putty knife	Phillips screwdriver
Drill with 3/8″ and 1″ wood bit	

STANDARD PARTS NEEDED

ILLUSTRATIONS (not to scale)

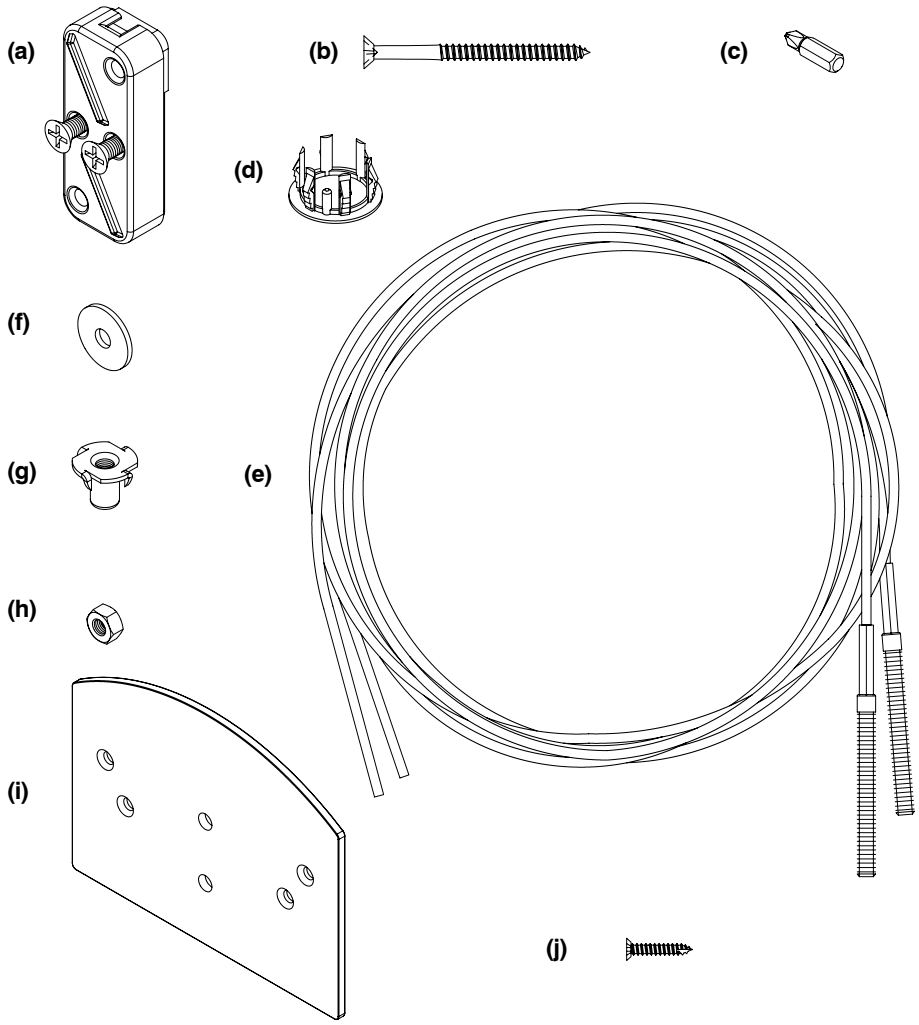

DESCRIPTION

(a) 2 – Cable clamps 1/4″ x 3 1/8″ (zinc die-cast)

(b) 4 – Heavy-shank mounting screws – #12 x 3″

(c) 1 – #3 Phillips drive bit

(d) 2 – Adjustment hole plugs

(e) 2 – Cable assemblies – 9′ or 12′ x 1/8″ diameter (galvanized steel)

(f) 2 – Fender washers – .25″ x .265″ x .06″ (zinc plated)

(g) 2 – T-nuts, 3-prong – 5/16″ – 18 x 3/8″ (zinc plated)

(h) 4 – Heavy hex nuts 1/4″ – 28 (zinc plated)

(i) 2 – Installation Plates (UDH units only)

(j) 4 – #7 x 7/8″ Screws (UDH units only)

19913911
2/14/2005

Note: The following instructions are for a Marvin bow or bay with head and seatboards attached.

Warning: Bow and Bay units can be very heavy and awkward to handle. It is important to obtain adequate assistance to avoid injury when handling the unit. Operator sash may be removed prior to handling to lighten the assembly.

IMPORTANT: The Marvin Cable Support System was designed to be used in the following configurations:

- All standard size 30 and 45 degree bays
- All special size 30 and 45 degree bays up to a maximum RO of 85 square feet.
- All standard size 3W bows
- All special size 3W bows up to a maximum RO of 85 square feet.

Site Preparation

1. Remove the skid plates from the bottom of the bow or bay unit and prepare a flat clean surface. Set the unit, seatboard down, on top of 4″ high support material. The support material should be placed under the sill of each flanker and perpendicular to the center unit and seatboard.

Unit Preparation

2. Remove the interior horizontal mull trim, followed by the vertical mull trim, on each mull that will receive a cable support. See figure 1.

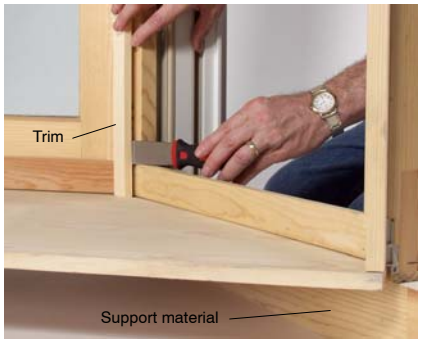

Figure 1

3. From the interior of the unit, drill a 3/8″ hole through the head and seatboards at precisely the point where the two jambs meet. See figure 2.

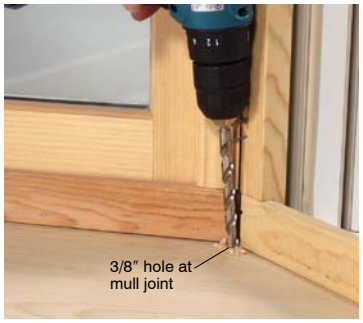

Figure 2

4. Place a 3/8″ "T" Nut into the drilled out hole on the exterior side of the headboard. Tap on the "T" Nut until it is fully seated. See figure 3.

Figure 3

Installing the Cable

5. Thread the rod end of the cable through the bottom hole and install flat washer and hex nuts. See figure 4.

Figure 4

6. Thread the other end of the cable up through the "T" Nut in the headboard.
7. Pull the cable tight and center the slot in the mull trim over the cable. Secure the mull trim with brad nails staggered on each side of the mull trim groove. Take care not to inadvertently place a nail through the mull trim groove and cable. See figure 5.

Figure 5

NOTE: For bow or bay units ordered prior to March 2005, a new piece of vertical mull trim may need to be ordered. In lieu of ordering new mull tim, a 3/8″ x 3/16″ slot may be cut down the center of the mull tim.

Installing Bottom Plate
(Double Hung Units Only)

8. Place the bow or bay unit interior side down on a flat clean surface.
9. Pull out the rod end of the cable until there is 8″–12″ of slack. Remove hex nuts and washer. Run the rod end of the cable through the hole nearest the flat edge of the installation plate and reinstall flat washer and hex nuts. Place the Ultimate Double Hung installation plate over the sill of the units. Fasten with 2 #7 x 7/8″ screws through the outer holes. Repeat for each cable location. See figure 6.

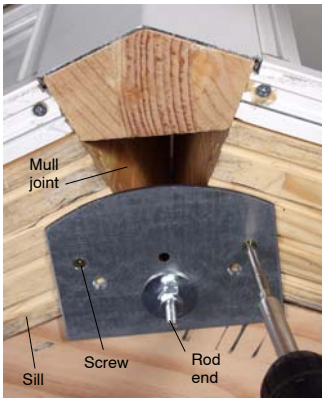

Figure 6

10. Proceed with installing the unit per Marvin Bow and Bay Installation instructions part number 19970100.

NOTE: Mark the soffit platform directly under the rod end of the cable and drill a 1″ hole to provide access to the adjustment screws. Plug the adjustment hole with the enclosed adjustment hole plugs.