Integrity All Ultrex Series Windows

Replacement Installation Instruction

These instructions are for the following All Ultrex window units along with their Picture/Transom units:

All Ultrex Casement (IFCA)	All Ultrex Single Hung (IFSH)	All Ultrex Double Hung (IFDH)
All Ultrex Glider (IFGL) Family	All Ultrex Awning (IFAWN)	Direct Glaze (IFDG) Rectangles

NOTE: ***Please read these instructions in their entirety before beginning to install your Integrity window product.***

ABSTRACT: These installation instructions demonstrate the installation of new All Ultrex Integrity windows in existing wood frame construction using an industry approved water management system. For other construction methods such as remodeling and recessed openings, refer to ASTM E2112-01. Standard Practice for Installation of Exterior Windows, Doors and Skylights for installation suggestions. Information on ASTM E2112-01 can be found on the ASTM website www.astm.org.

For product specific issues, service instructions and other field service guides, refer to the Integrity Service Manual, visit our website at integritywindows.com, or contact your Integrity representative.

Regional standard practices, environmental conditions, and codes may vary and supersede the procedures contained within. The responsibility for compliance is yours: the installer, inspector, and owner(s).

After Market Products

Alterations to Integrity products including window films, insulating or reflective interior window treatments or additional glazings can cause excessive heat buildup and/or condensation. They may lead to premature failures not covered under warranty by Integrity Windows and Doors.

Before purchasing or applying any product that may affect the installation or performance of Integrity windows contact the manufacturer of after market product/glazings that are not supplied by Integrity and request written product use, associated warranties and damage coverage. Provide this information and warranties to the end user and/or building owner for future reference.

2014-01-01
19972220

Integrity from MARVIN
Windows and Doors
Built to perform.

Table of Contents

Before You Begin.....2
Installer/Builder Information.....2
Prepare the Unit..... 2
Prepare the Opening-Exterior Installation..... 3
Prepare the Opening- Interior Installation 4
Installing the Replacement Window 5

Before You Begin

These instructions detail how to prep an existing double hung frame for a new Integrity All Ultrex window. Installation into other window frames may require adapting the window opening preparation process. Consult with your Integrity representative concerning installation into other window frame openings.

Installer and Builder Information

- It is the responsibility of the builder, installer and subcontractors to protect the interior and exterior of windows from contact with harsh chemical washes, construction material contamination and moisture. Damage to glazing, hardware, weather strip and cladding/wood can occur. Protect with painters tape and/or protective sheathing as required. Follow all guidelines regarding material use, preparation, personal safety and disposal.
- Refer to the enclosed painting instructions on the last page for exterior and interior finish instructions.
- Contact your Integrity supplier if you have any questions regarding product and materials used in manufacturing or questions on replacement parts.
- Units are sent with hardware and fasteners. Follow installation instructions included with part if applicable.

You Will Need to Supply	
Safety glasses	Hearing protection
Level	Square
Hammer	Shims
Fiberglass insulation	Tape measure
Perimeter sealant	2" Roofing nails
Utility knife	Foam backer rod
Reciprocating saw	Power drill with bits

NOTE: Sealants used for installation must be Grade NS Class 25 per ASTM C920 and compatible with the building exterior, window exterior surface, and flashing/ water management materials.

NOTE: Numbers listed in parentheses () are metric equivalents in millimeters rounded to the nearest whole number.

WARNING

Always practice safety! Wear the appropriate eye, ear and hand protection, especially when working with power tools.

ATTENTION

Remove the screen prior to installation.

Prepare the Unit

NOTE: Inspect unit for color, damage, and size prior to installation.

1. Remove and properly discard all shipping material.
2. Remove all screens and loose hardware, set aside for future use.

NOTE: For Field Mulled units, please follow instructions that came with that kit at this time.

3. Install a bracket at every installation hole in the jamb and head jamb.
4. Be sure operating units are in the closed and locked position until secured in the opening and ready for final adjustments. Once the unit has been shimmed and secured in the opening, open the unit and remove any shipping blocks placed between the frame and sash. Operate the sash and perform final adjustments to the frame to ensure smooth operation of the unit.

NOTE: Operator units must be locked when handling/ placing the unit in the opening. Damage to the frame due to racking can occur. Until unit is in place and properly shimmed, the sash may disengage if unlocked and could cause personal injury as well as damage the sash and/or frame.

Exterior Installation-Prepare the Opening

The following instructions detail the removal of sash and jamb hardware on windows that utilize a pulley and weight system. Your existing window may differ from those shown. All jamb hardware and/or jamb liners must be removed prior to installation of the Integrity unit.

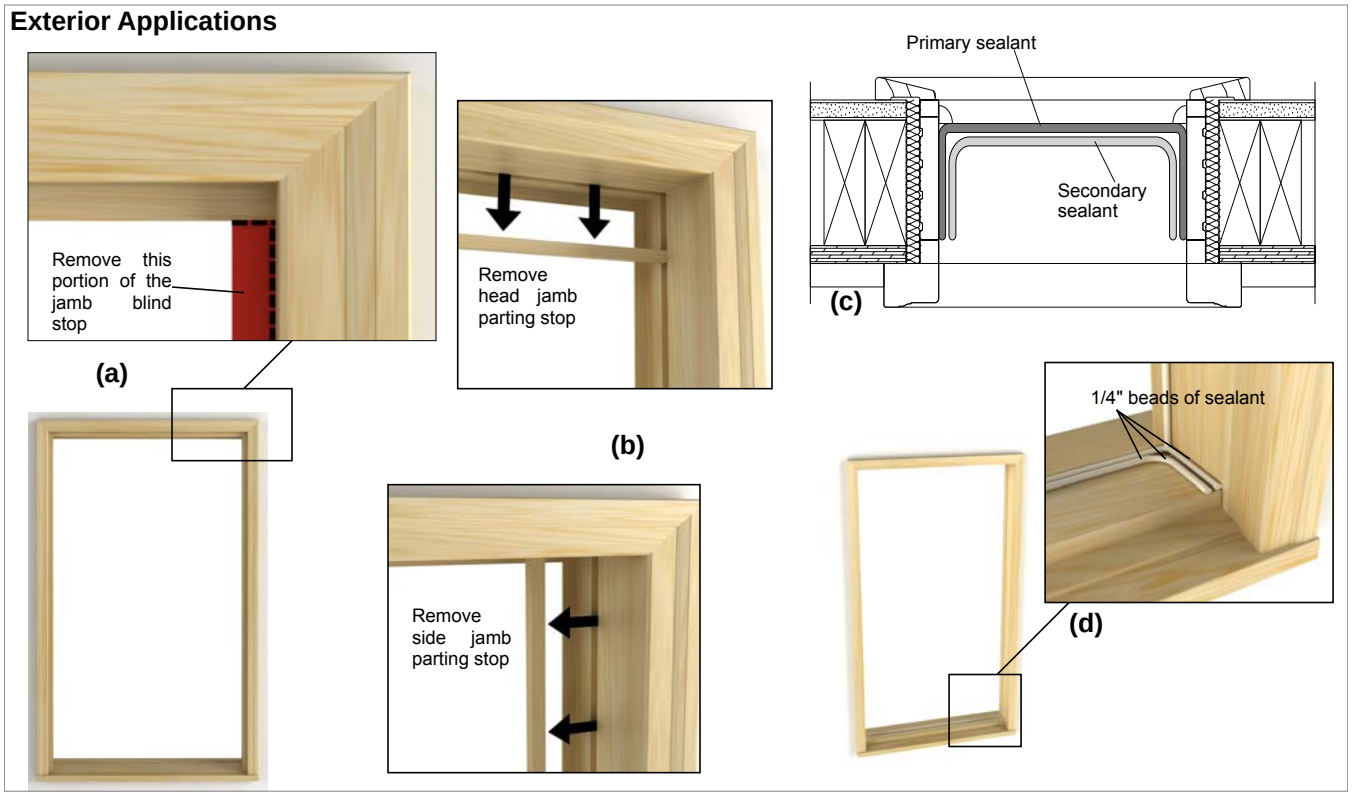

Figure 1 Remove blind stop and parting stops on exterior applications.

IMPORTANT

Before beginning installation be sure to inspect the existing opening for any signs of rot, decay, or other deterioration. It is essential that all substrates and sheathing be solid and free from defects to ensure proper installation. If the above conditions are not met, please take corrective action and repair and/or replace components as necessary.

1. On exterior applications, use a reciprocating saw or hammer and chisel to remove the blind stop. Cut it flush with the exterior casing and frame. See figure 1a.

2. If the existing window unit used a weight pocket and pulley system, lower the top sash and cut the balance cords to remove the sash. Disconnect and remove any balance mechanisms attached to existing window frame.

3. Remove the head jamb and side jamb parting stops with a pry bar or adjustable pliers. See figure 1b.

4. If applicable, cut the balance cords on the lower sash and remove them from frame. Remove any remaining balance mechanism hardware from the existing frame that may hinder installation. If your frame used weight pockets at the jambs, remove them (if possible) and fill cavity with insulation.

5. Apply a 1/4" (6) bead of sealant at both sill to jamb joints and on the back of the interior sash stops or moulding. See figure 1c.

6. Apply a secondary continuous bead of sealant on sill as shown in figure 1d.

NOTE: The placement of the secondary continuous bead of sealant is the same on interior and exterior installation.

Interior Installation - Prepare the Opening

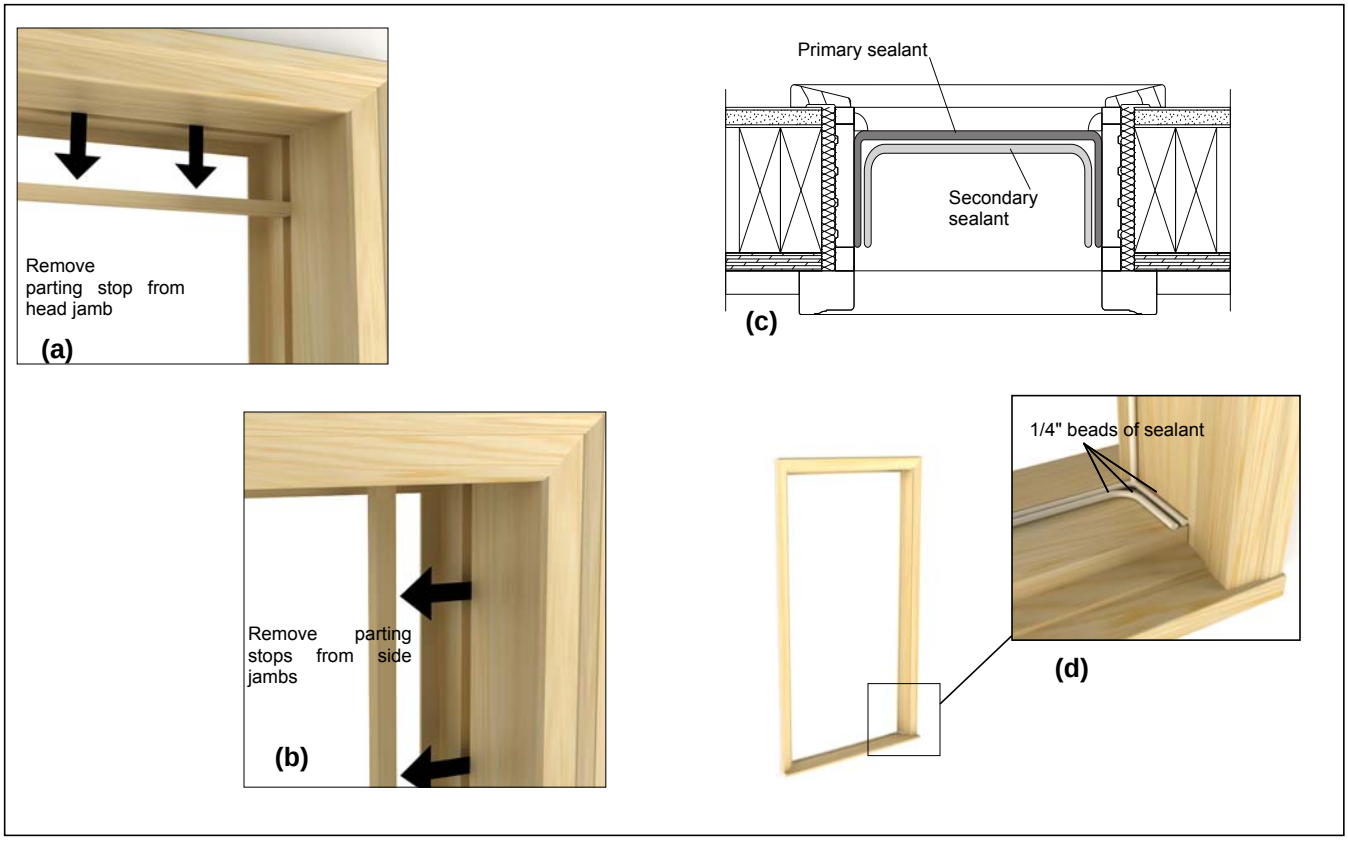

Figure 2 Remove stops on interior applications.

IMPORTANT

Before beginning installation be sure to inspect the existing opening for any signs of rot, decay or other deterioration. It is essential that all substrates and sheathing be solid and free from defects to ensure proper installation. If the above conditions are not met please take corrective action and repair and/or replace components as necessary.

1. Remove all interior stops with a pry bar or stiff putty knife. It may be necessary to break the paint seal with a utility knife.

IMPORTANT

Do not break or damage interior stops if they are to be reused.

2. Remove the lower sash from the frame. If the existing window unit used a weight pocket and pulley system, raised the lower sash, cut the balance cords, and then remove the sash.

3. Remove the parting stop from head jamb with a stiff putty knife or pry bar. See figure 2a.

4. Remove parting stops from both side jambs. See figure 2b. Lower the top sash and cut the balance cords. Remove the top sash, disconnect and remove any balance mechanisms attached.

5. Remove any remaining balance mechanism hardware from the existing frame such as balance cords, balance cord pulleys, etc. If your frame used weight pockets at the jambs, remove the weights (if possible) and fill cavity with fiberglass insulation

6. Apply a 1/4" (6) bead of sealant at sill to jamb joints, sill to sill liner/stool joints, and on the back of the blind stop of existing window frame. See figure 2c.

7. Apply a secondary continuous bead of sealant as shown in figure 2d.

NOTE: The placement of the secondary continuous bead of sealant is the same on interior and exterior installation.

Installing the Replacement Window

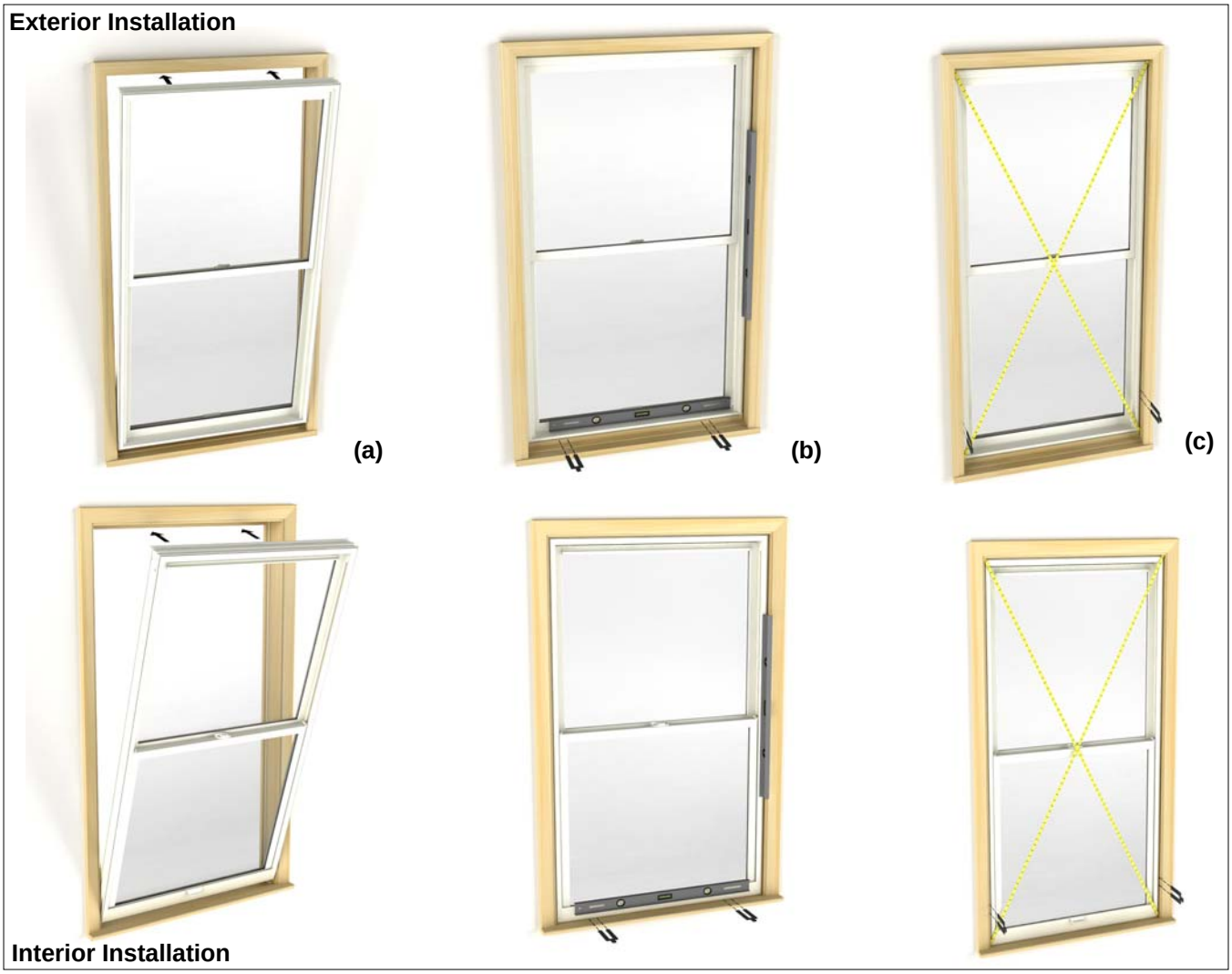

Figure 3 Center, shim, and fasten the unit in the opening.

Seek Assistance

Installation of the insert will be easier if another person is helping to hold the unit in place, especially on larger and heavier units.

1. Center the unit in the opening. Depending on interior or exterior installation, press unit against interior sash stop or blind stop. See figure 3a.

IMPORTANT

Take care not to over or under shim the jambs.

2. If necessary, place shims under corners of unit to level. Level the unit horizontally from jamb to jamb at the sill of the unit. See figure 3b.
3. Place shims at the bottom corners at the pre-drilled screw holes in the jamb. See figure 3c. (horseshoe type stackable shims recommended.)

Installing the Unit (continued)

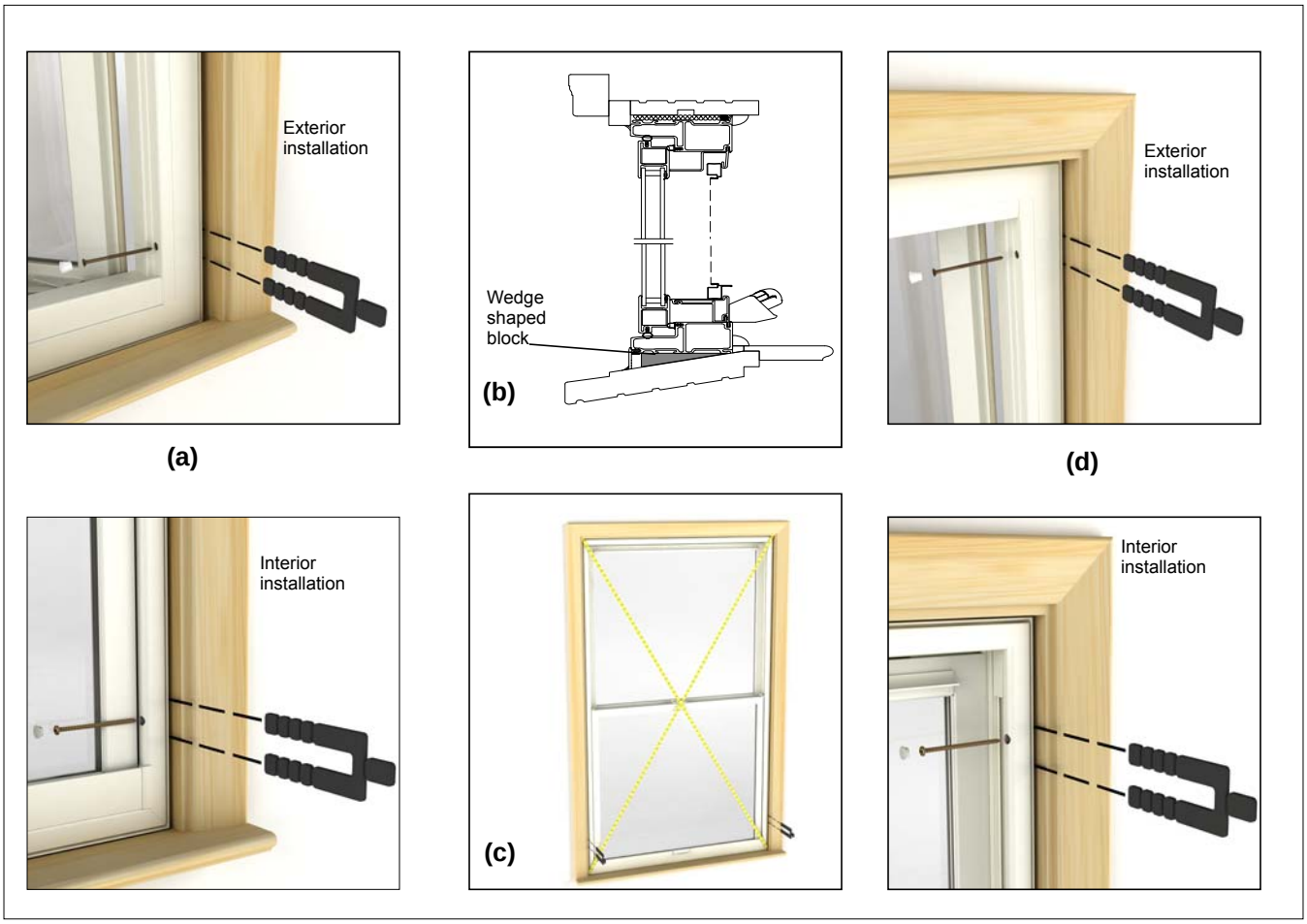

Figure 4

4. While pressing the unit against stops, drive the #8x3"(76) screws into pre-drilled screw holes at the bottom corners. Only tighten until snug. See figure 4a.

5. On installations with a sloped existing sill, install a wedge shaped block underneath sill at both corners, in the center of the unit, at all meeting stiles and mull locations to provide adequate support. Blocking material to be held back 3/4" (19) from exterior of unit to allow for proper installation of frame expander. See figure 4b.

6. Square frame by taking diagonal measurements. Measurements should be equal. Adjust frame by applying shims at pre-drilled screw holes in jambs. Adjust upper shims as necessary. See figure 4c.

7. When the window is square and plumb, hold the unit firmly against the blind stop or interior stop (depending on installation method), drive the installation screws provided through pre-drilled holes in jambs at the top corners. Do not over tighten screws. See figure 4d.

8. Recheck diagonals for squareness. See figure 4c. Adjust screws as necessary to obtain frame squareness. If square apply additional shims between the side jambs and existing window opening at additional pre-drilled holes.

9. Fasten unit in the opening through additional installation holes. On picture units shim at the head jamb and fasten with installation screw.

10. Once the unit is flush, square, and plumb in the opening and sash operate properly, cut shims flush with the interior jamb or exterior of frame.

Sealing the Opening

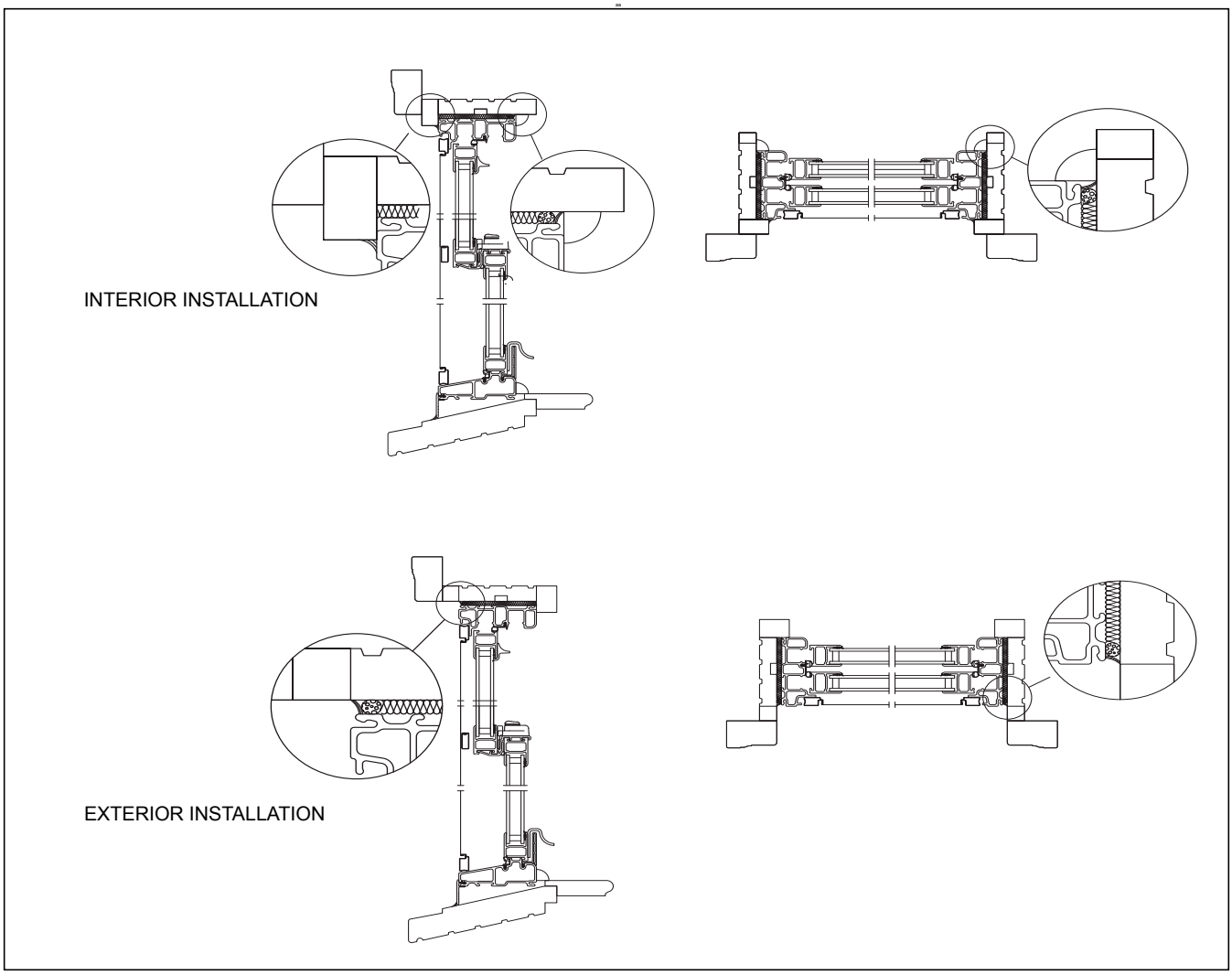

Figure 5

1. Fill gaps between the new window frame and existing window frame with fiberglass insulation. Do not pack tightly.

NOTE: Foam type insulation may be used to form an infiltration seal as required by some building codes. However, a low expansion and low compression type foam should be used in combination with fiberglass insulation.

CAUTION

When using expanding foam insulation it is very important not to bow the head jamb or side jambs of the replacement unit.

2. For interior installation, run a bead of sealant between the new frame and existing frame around the entire interior perimeter. If necessary install backer rod prior to sealant application. See figure 5. Replace interior sash stops or new trim as desired.

3. For exterior installations, apply a backer rod between the new frame and existing window frame. Place a bead of sealant over the backer rod, so that it contacts both the new frame and existing window frame.

4. For both installation types, trim out the sill with frame expander.

5. At the exterior, run a bead of sealant between the new window and the existing window frame (blind stop on interior applications). See figure 5.

IMPORTANT

Finish the cut edge of the blind stop on exterior installations with paint, stain, or other type of sealer.