CHAPTER 24

INTERIOR SHADES

Table of Contents

	PAGE
History	24.2
Part Identification	
Part Identification – Ultimate Casement	24.3
Part Identification – Direct Glaze Rectangular/Door Transom Direct Glaze	24.4
Part Identification – Swinging Door	24.5
Part Identification – Sliding French Door	24.6
Part Identification – Sliding Patio Door	24.7
Parts	
Hardware and Miscellaneous	24.8
Retro Fit Drill Jig Kits	24.11
Replacement Wood Wrap Parts	24.12
Surround Replacement	24.13
Integrated Interior Shade System Replacement	24.14

ATTENTION:

- Specification and technical data are subject to change without notice.
- Numbers listed in parentheses ( ) are metric equivalents in millimeters rounded to the nearest whole number.

HISTORY

Produced	Unit Type	Features or Changes	Status
2013	Ultimate Casement/Awning, Ultimate Replacement Casement/Awning, Direct Glaze Rectangular, 1 3/4″ and 2 1/4″ Ultimate Inswing and Outswing French Door, Ultimate Sliding French Door and Sliding Patio Door.	December 16, 2013 – Interior Shade option introduced for unit types listed. Interior Shades are a cellular shade attached to the window or door by a surround or integrated into the product. Interior shades are available to be retro–fitted to the Ultimate Casement, Ultimate Replacement Casement, Ultimate Awning, Ultimate Replacement Awning, Direct Glaze Rectangular and Ultimate Inswing and Outswing French Doors. Shade cartridges are removable and replaceable.	Present

Ultimate Casement, Ultimate Awning, Ultimate Replacement Casement, Ultimate Replacement Awning (shown in CUCA operator)

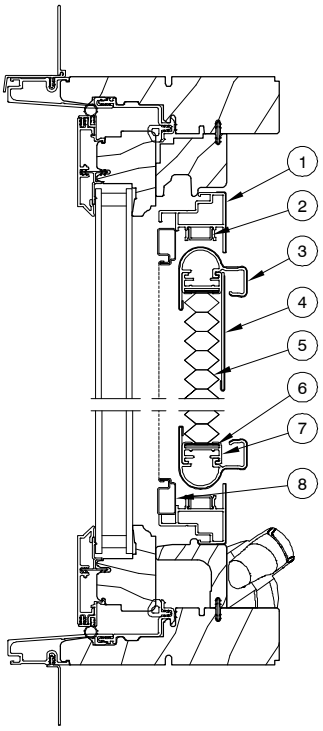

Head Jamb and Sill

1. UCA Cellular Shade Surround (wood wrap)
2. Guide Track
3. Pull Bar (wood wrap)
4. Stack Cover, Short (wood wrap)
5. Shade Fabric
6. Filler Strip
7. Pull Bar to Fabric Adapter
8. Screen Frame

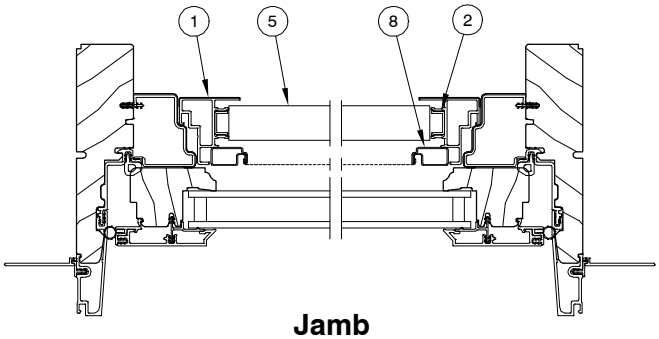

Jamb

NOTE: Not to scale; specifications subject to change without notice.

Direct Glaze Rectangular and Door Transom Direct Glaze (shown in CDGPOLY)

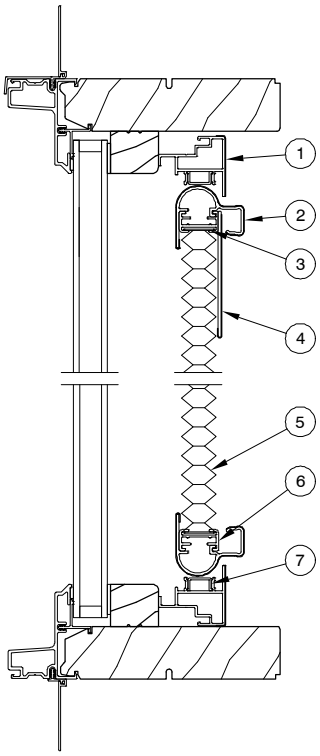

Head Jamb and Sill

1. UCA Cellular Shade Surround (wood wrap)
2. Pull Bar, Cellular Shade (wood wrap)
3. Filler Strip
4. Stack Cover, Short (wood wrap)
5. Shade Fabric
6. Pull Bar to Fabric Adapter
7. Guide Track

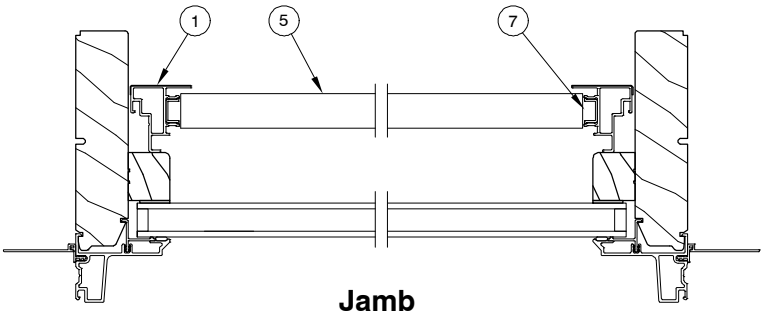

Jamb

NOTE: Not to scale; specifications subject to change without notice.

Ultimate Inswing French Door and Ultimate Outswing French Door (shown in CUOFD)

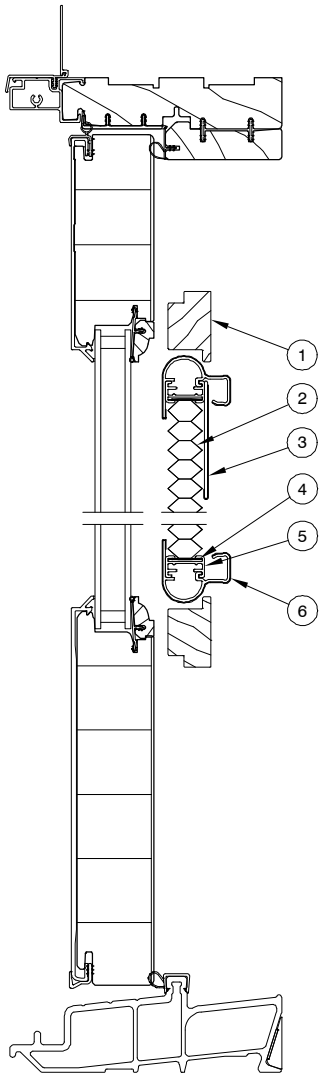

1. Rail, Lip Mould Surround
2. Shade Fabric
3. Stack Cover, Short (wood wrap)
4. Filler Strip
5. Pull Bar to Fabric Adapter
6. Pull Bar (wood wrap)
7. Stile, Cellular Shade Surround, Traditional Profile
8. Guide Track
9. Stile, Cellular Shade Surround, Contemporary Profile

Head Jamb and Sill (Contemporary Profile)

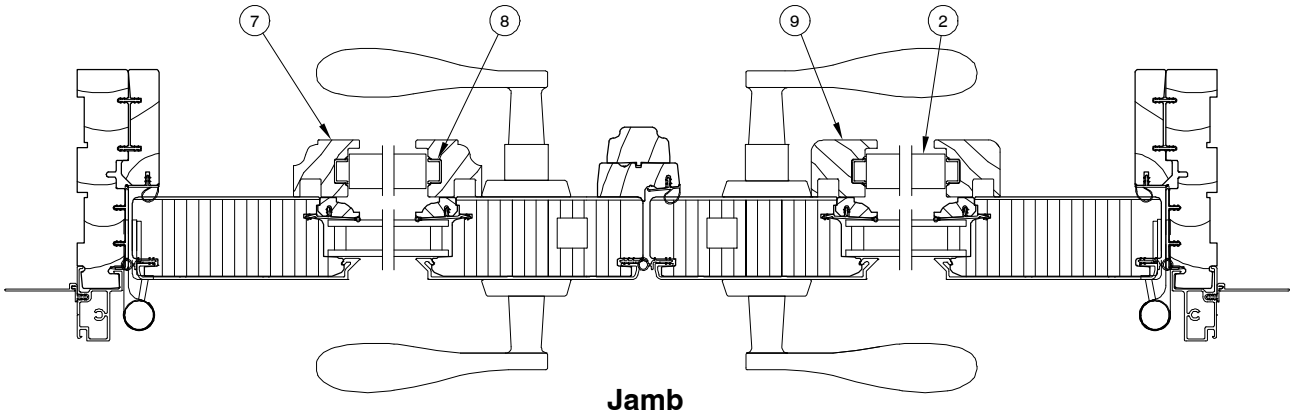

Jamb

NOTE: Not to scale; specifications subject to change without notice.

Integrated Shade System
USFD
(shown in WUSFD)

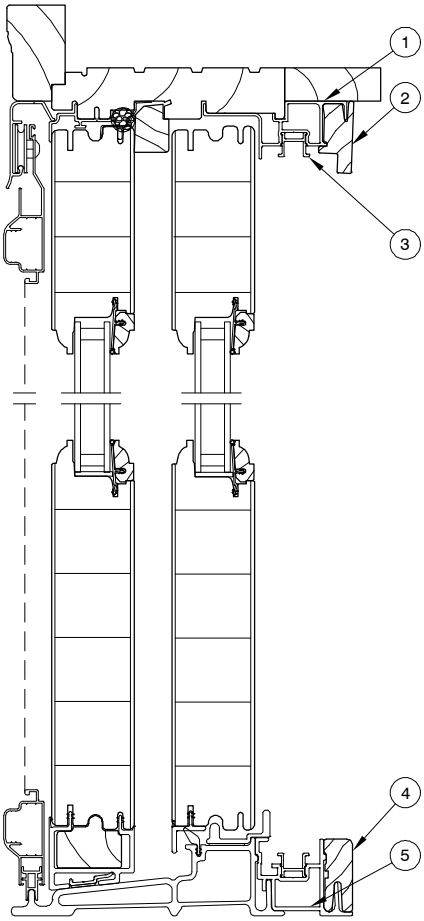

1. Header Guide
2. Header Guide Cover
3. Guide Track
4. Sill Liner
5. Sill Extension
6. Locking Stile Extension
7. Pull Bar (wood wrap)
8. Pull Bar to Fabric Adapter
9. Filler Strip
10. Connecting Barb
11. Meeting Stile Extension
12. Shade Fabric
13. Pocket Cover, Wood Wrap
14. Stationary Jamb Extension
15. Center Jamb Extension

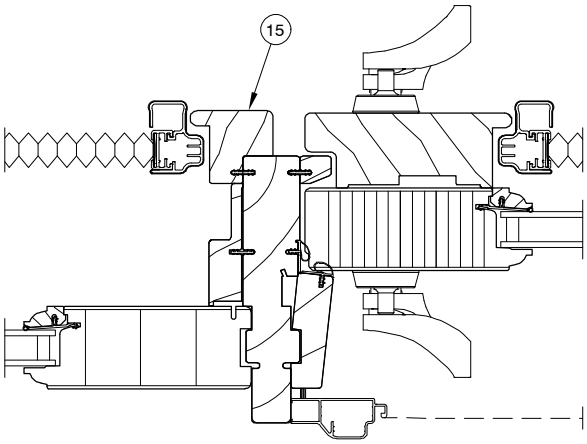

Head Jamb and Sill

Center Jamb – OXO

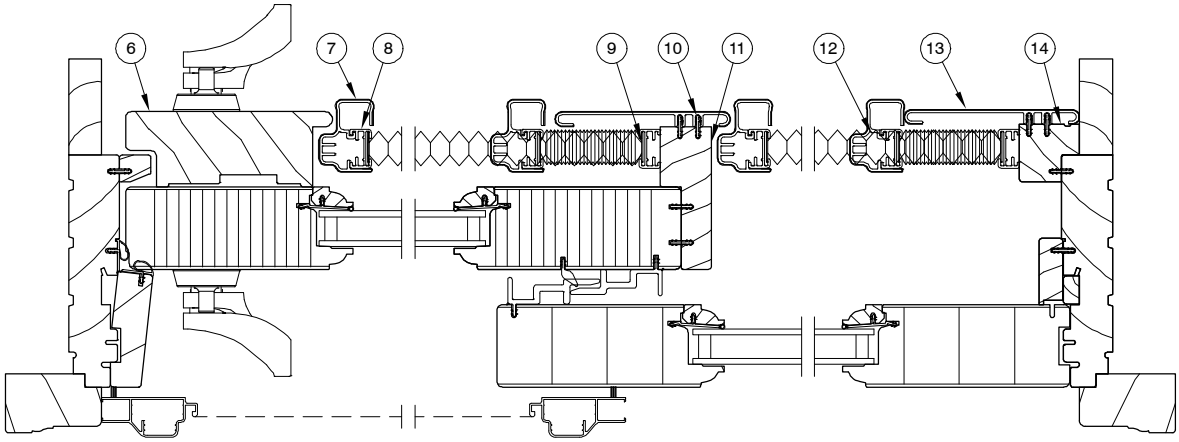

Jamb – XO

NOTE: Not to scale; specifications subject to change without notice.

Integrated Shade System
SPD
(shown in CSPD)

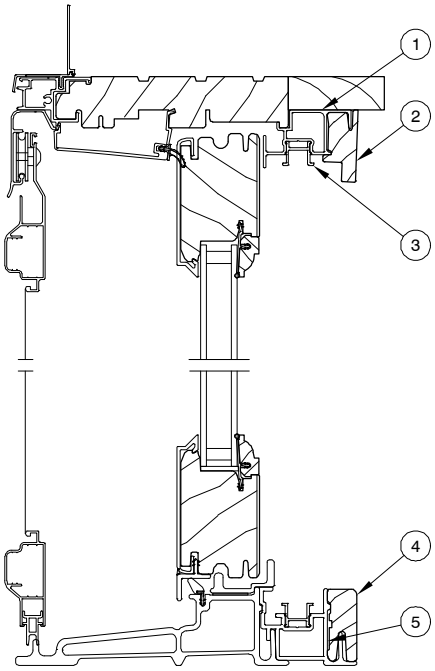

1. Header Guide
2. Header Guide Cover
3. Guide Track
4. Sill Liner
5. Sill Extension
6. Locking Stile Extension
7. Pull Bar (wood wrap)
8. Pull Bar to Fabric Adapter
9. Filler Strip
10. Connecting Barb
11. Meeting Stile Extension
12. Shade Fabric
13. Pocket Cover, Wood Wrap
14. Stationary Jamb Extension

Head Jamb and Sill

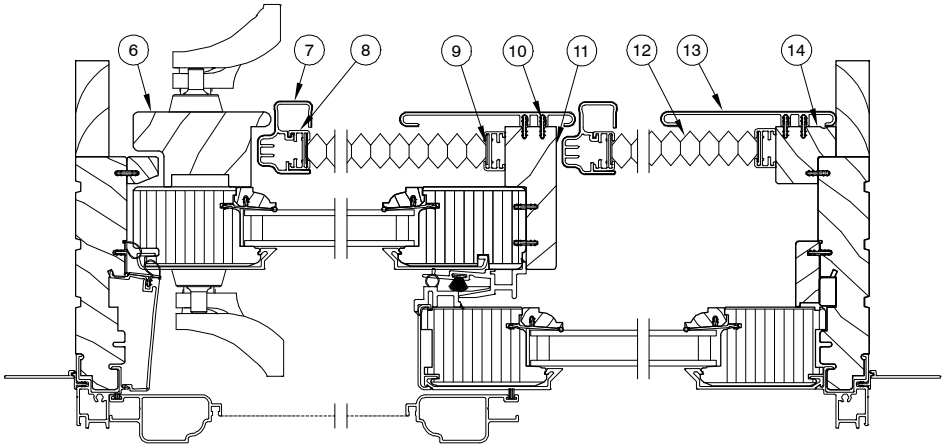

Jamb

NOTE: Not to scale; specifications subject to change without notice.

TO ORDER REPLACEMENT PARTS

When ordering Interior Shade replacement parts specify:

1. type of unit;
2. part number;
3. description;
4. color.

ILLUSTRATION *NOT TO SCALE*	DESCRIPTION	OPERATOR/ COLOR/LENGTH	PART NO.
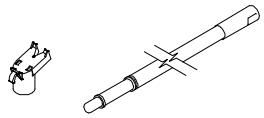	**Extension Pole with End Adapter** UCA, DG, Swinging Door	2 1/2–4 1/2 ft. ext. 5–10 ft. ext.	10501453 10501454
	End Adapter, Extension Pole UCA, DG, Swinging Door		10810489
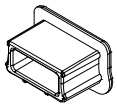	**Pull Bar End Cover** UCA, DG, Swinging Door	BG WH BZ	10501413 10501415 10501414
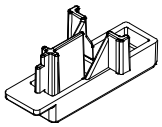	**Pull Bar End Cap** UCA, DG, Swinging Door	BG WH BZ	10501410 10501412 10501411
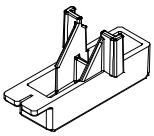	**Pull Bar End Cap** Sliding Door	BG BZ	10501451 10501452
	Terminal Ring UCA, DG, Swinging Door and Sliding Door NOTE: Used when replacing end caps.	BG	11860339
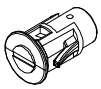	**Magnetic Catch, Pull Bar** Sliding Door	BG	11860339
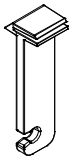	**Shade Retention Plunger – Part A** UCA	BG WH BZ	10501440 10501441 10501442
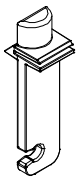	**Shade Retention Plunger – Part A** DG	BG WH BZ	10501437 10501438 10501439
	Shade Retention Plunger – Part B UCA and DG	BG WH BZ	10501443 10501444 10501445

ILLUSTRATION *NOT TO SCALE*	DESCRIPTION	OPERATOR/ COLOR/LENGTH	PART NO.
	Leaf Spring UCA and DG		11868835
RH Shown	**Corner Key, Lower** UCA and DG *includes:* *2 – #6–18 x 1/4″ Phillips pan head screws (02056061)*	LH RH	10501458 10501457
LH Shown	**Corner Key, Upper** UCA and DG *includes:* *2 – #6–18 x 1/4″ Phillips pan head screws (02056061)*	LH RH	10501455 10501456
	Spring, Shade Cartridge *3/16″ x 2 1/2″*		10501435
	Spring, Shade Cartridge *1/4″ x 2 1/2″* NOTE: Used on shade surrounds with an OM width greater than 50 3/16″.		10501436
	Single Jack Chain	3″ (76) 5″ (127)	10840121 10840122
	Retainer Clip Swinging Doors *includes:* *2 – #6 x 5/8″ flat head screws (11800519)*		10501433
	Mounting Screw, Shade Surround Swinging Doors		11806112
	Guide Track, with adhesive tape V2277 Swinging Doors UCA/DG (Stiles)	120″ (3048) BG WH BK	 15364199 15364299 15364399
	Guide Track, without adhesive tape V2277 UCA/DG (Rails)	66″ (1676) BG WH BK	 15364472 15364572 15364672
	Guide Track V2323 Sliding Doors	96″ (2438) BG BK	 15980096 15980196
	Gasket, Header Guide Sliding Doors		10150240

ILLUSTRATION *NOT TO SCALE*	DESCRIPTION	OPERATOR/ COLOR/LENGTH	PART NO.
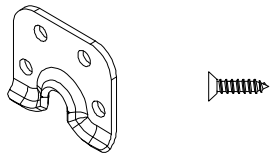	**Extension Bracket, Locking Stile** Sliding Doors		10501433
	Uses (order separately): *2 – #7 x 5/8″ flat head screws*		11800734
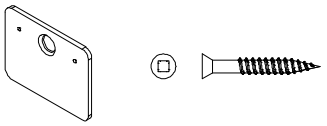	**Magnet Strike Plate** Sliding Doors	Silver BZ	10815200 10815193
	Uses (order separately): *1 – #6 x 1″ Trim head head screw*	Silver BZ	11800533 11800534
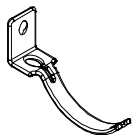	**Cord Tensioner** Sliding Doors *includes:* *1 – #6 x 1″ Flat head head screw* *(Beige – 11800630, Bronze – 11800613)*	Beige BZ	11860428 11860429
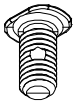	**Quarter Turn Connector** Sliding Doors		11860334

RETRO FIT DRILL JIG KITS

ILLUSTRATION *NOT TO SCALE*	DESCRIPTION	OPERATOR/ COLOR/LENGTH	PART NO.
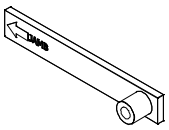	**DG** *Includes:* *Direct Glaze Retro Fit Drill Jig* *Direct Glaze Retro Fit Instruction*		11856424
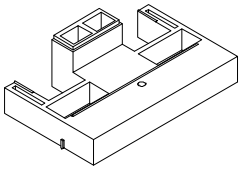	**1 3/4″ Swinging Door** *Includes:* *1 3/4″ Swinging Door Shade Retro Fit Drill fixture* *Swinging Door Retro Fit Instruction*		11856425
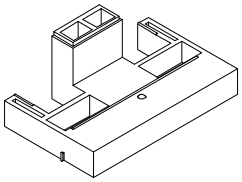	**2 1/4″ Swinging Door** **or 1 3/4″ Swinging Door IZ4** *2 1/4″ and 1 3/4″ IZ4 Swinging Door Retro Fit Drill fixture* *Swinging Door Retro Fit Instruction*		11856426
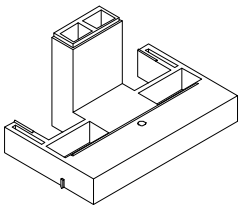	**2 1/4″ Swinging Door – IZ4** *Includes:* *2 1/4″ IZ4 Swinging Door Retro Fit Drill fixture* *Swinging Door Retro Fit Instruction*		11856427

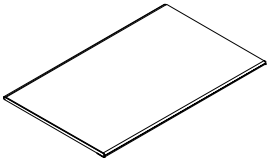

C0108 – Stack Cover,
Short, Wood Wrap
UCA, DG, Swinging Door

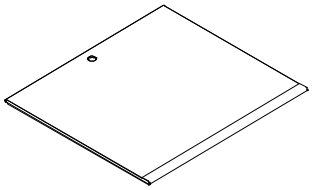

C0107 – Stack Cover,
Tall, Wood Wrap
UCA, DG, Swinging Door

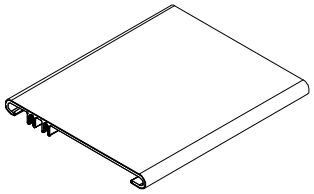

C0109 – Pocket Cover
Wood Wrap
Sliding Door

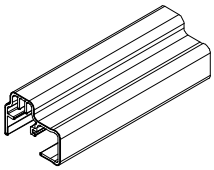

C0110 – Pull Bar
Wood Wrap
Sliding Door

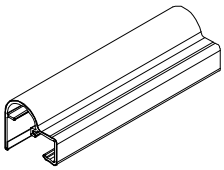

C0103 – Pull Bar
Wood Wrap
UCA, DG, Swinging Door

TO ORDER:
Order through Configured Parts in OMS.

PARTS – SHADE SURROUNDS AND SCREENS

When ordering replacement surrounds and screens, specify:

1. Original order number;
2. Unit type;
3. wood species;
4. finish;
5. fabric color
6. size; – If there is no existing surround from which to obtain the measurements of the surround or screen insert, determine the size by using measurement conversion chart below. The daylight opening is the measurement of the visible glass.

UCA Shade Surround	**Width**	**Height**
Frame OM to Surround OM	–4 5/16″ (110)	–4 29/32″ (125)
UCA Shade Surround Screen Insert	**Width**	**Height**
Frame OM to Screen Insert OM	–5 5/8″ (143)	–6 7/32″ (158)

DG Rectangle Shade Surround – Interior Mount 5/4	**Width**	**Height**
Frame OM to Surround OM	–2 9/32″ (56)	–2 9/32″ (56)
DG Rectangle Shade Surround – Interior Mount 4/4	**Width**	**Height**
Frame OM to Surround OM	–1 15/32″ (37)	–1 15/32″ (37)

Swinging Door, Side Lite and Transom Shade Surround	**Width**	**Height**
Daylight Opening to Shade Surround	+2 3/4″ (70)	+2 15/16″ (75)

ORDERING REPLACEMENT INTEGRATED INTERIOR SHADE SYSTEM FOR SLIDING DOORS

To order replacement Integrated Interior Shade System specify:
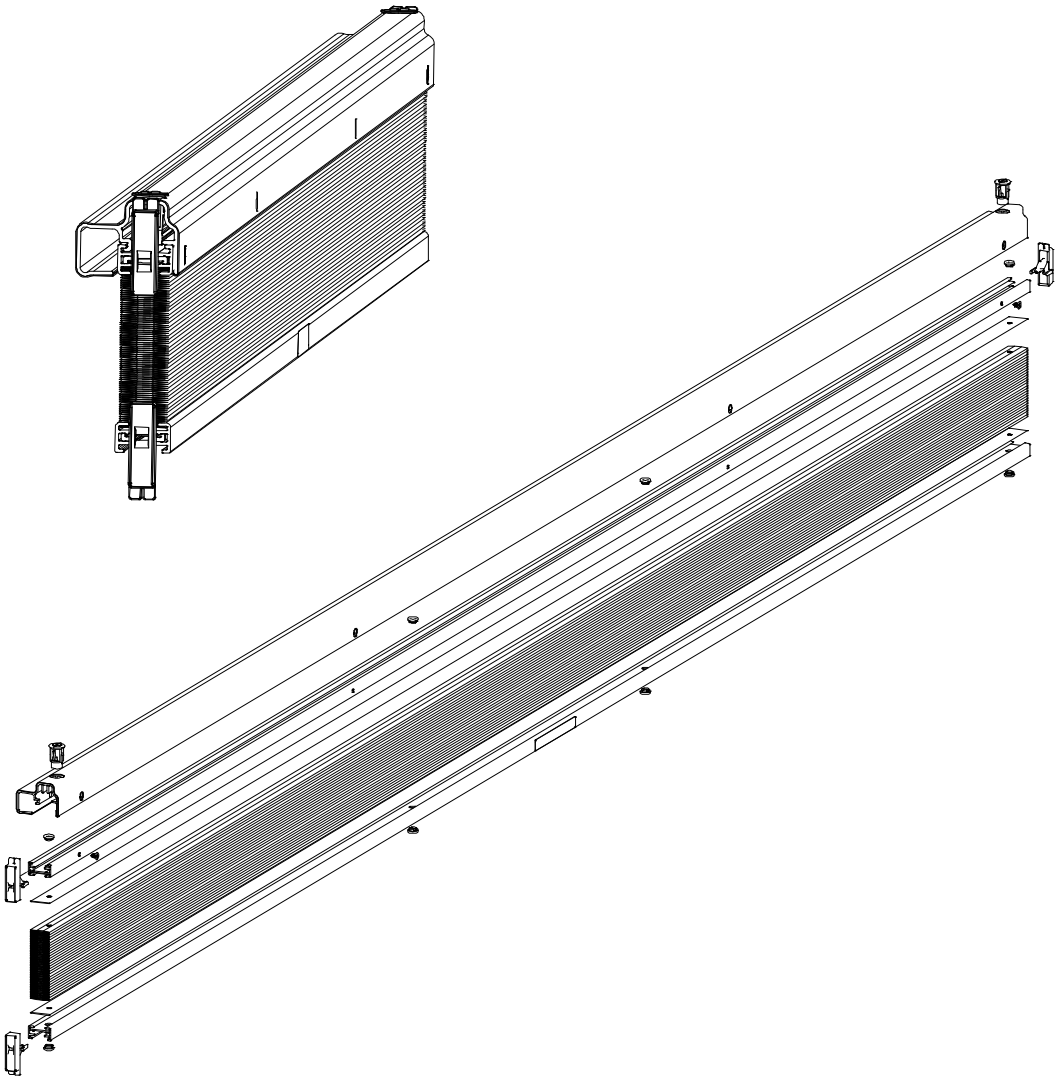
1. Original order number;
2. Call number;
3. OM of panel;
4. daylight opening;
5. handing;
6. wood species;
7. finish
8. fabric color