2 1/4″ Outswing French Door

Field Assembly Instructions (OO Configuration)

MARVIN Windows and Doors
Built around you.™

BEFORE YOU BEGIN

IMPORTANT! Read these instructions thoroughly and account for all parts shipped before beginning to assemble your Stationary Door.

YOU WILL NEED TO SUPPLY

Safety glasses	1 1/2″ finish nails
1/8″ drill bit	2 1/2″ finish nails
Stiff putty knife	Rubber mallet
Construction adhesive	
Power drill/driver with Phillips head bit.	

Qty	Description	Usage
1	Door Frame	
2	Door panel	
60	#7 x 3/4″ screw	Head jamb bracket Side jamb bracket
1	Mull base	Meeting stile
1	Mull casing	Meeting stile
20	#7 x 2″ screw	Mull base

ASSEMBLING THE UNIT

1. Remove head jamb and side jamb part stops and set aside in a safe location for reinstallation. See illustration 1.

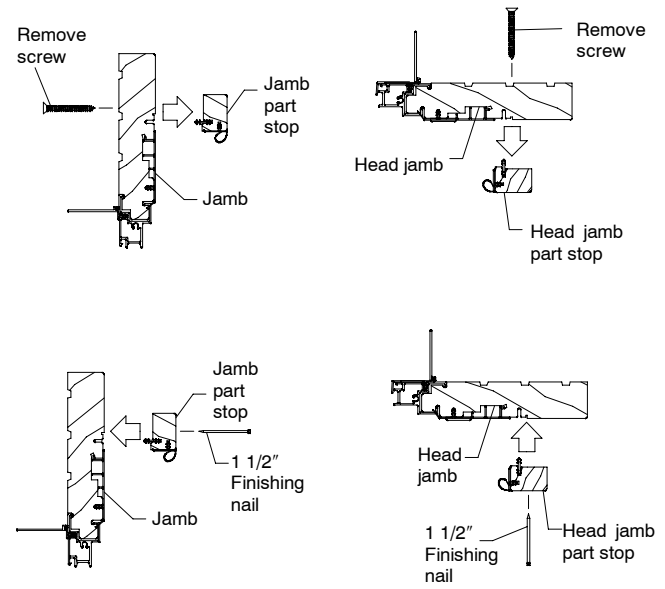

1

Hint: For safety and ease of assembly, shim and secure the frame into the opening per product installation instructions prior to installing the door panels.

2. Install panels from the exterior, setting and aligning the sill bolts at the bottom of the panel with the holes in the sill. Tilt the panel up and into place. See illustration 2.

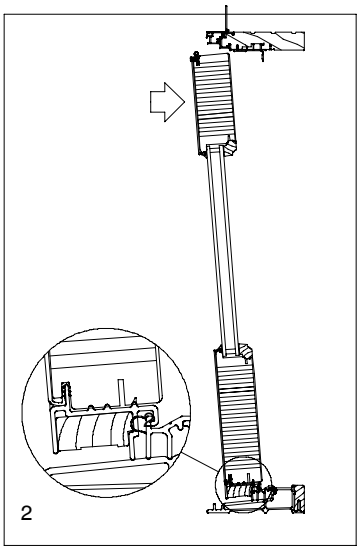
2

3. Pre-drill 1/2″ deep screw holes through the frame brackets into the panels using a 1/8″ drill bit. Insert and tighten the #7 x 3/4″ screws through the head and jamb brackets. See illustration 3.

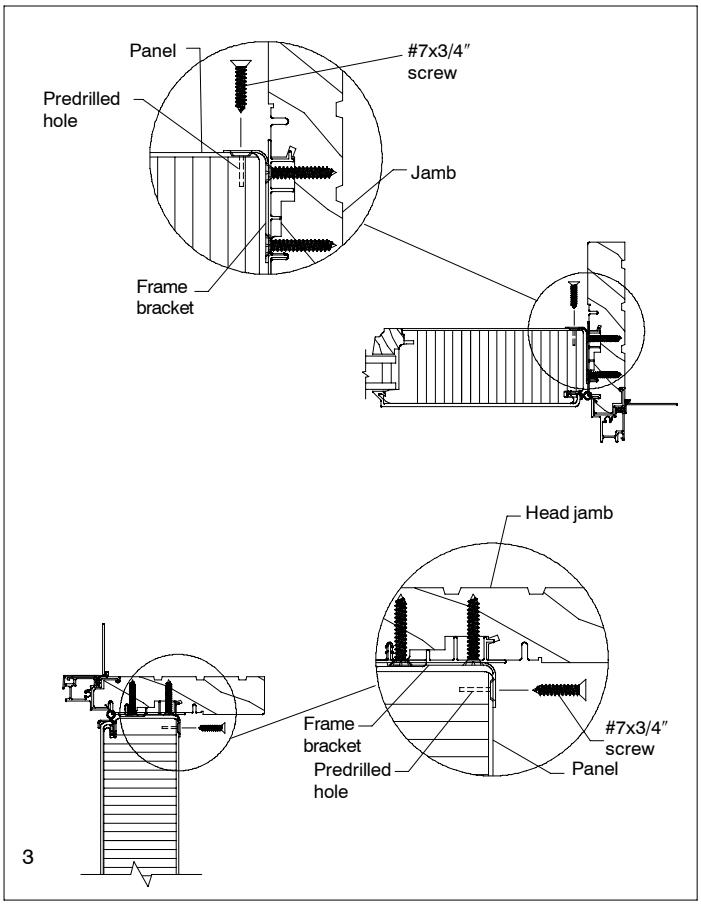

3

4. Install head jamb and side jamb part stops. See illustration 1.

2007-11-06
19970043

5. Place mull base flush with the edge on one of the panels. Drill 1/8″ pilot holes 3″ in from each end and spaced 12″ apart through the mull base and 1/2″ into the door panel. See illustration 4.

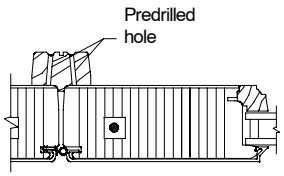

4

6. Fasten mull base to the door panel using #7 x 2″ screws. Apply a 1/8″ bead of construction adhesive to the mull base, press and fasten mull cap using 2 1/2″ finish nails. See illustration 5.

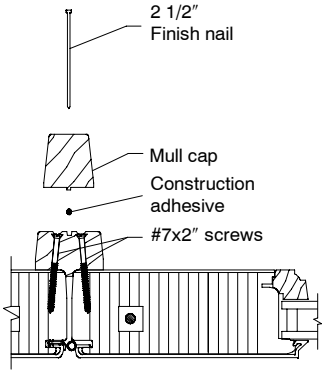

5